SANYO

FILE NO.

SERVICE MANUAL (SUPPLEMENT)

Multimedia Projector

Model No. PLC-XP51
PLC-XP51L

U.S.A., Canada,
Europe, Asia, Africa

Original Version

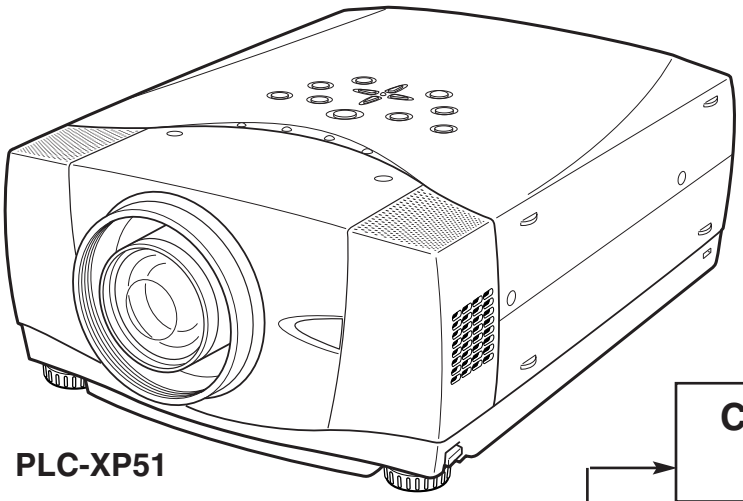

PLC-XP51

Chassis No. MH5-XP5100
MH5-XP51L00

NOTE: Match the Chassis No. on the unit's back cover with the Chassis No. in the Service Manual.

If the Original Version Service Manual Chassis No. does not match the unit's, additional Service Literature is required. You must refer to "Notices" to the Original Service Manual prior to servicing the unit.

Note:
Model PLC-XP51L does not provide projection lens.

- NOTE -

Any information not contained in this manual will be found in the original model's service manual **SM5110500-00** for models **PLC-XP55** and **PLC-XP55L**.

FILE WITH ORIGINAL SERVICE MANUAL (SM5110500)

PRODUCT CODE
1 122 277 00 (MH5A)
1 122 277 20 (MH5AL)
1 122 285 00 (PH5A)
1 122 285 20 (PH5AL)
1 122 285 02 (PH5C)
1 122 285 22 (PH5CL)

REFERENCE NO. SS5110715-00

■ Contents

- NOTE -

Any information not contained in this manual will be found in the original model's service manual **SM5110500-00** for models **PLC-XP55** and **PLC-XP55L**.

MAJOR CHANGES as below:

- LCD Panels and LCD driving circuit
- Projection Lens
- Optical parts
- Electrical parts (the lamp and the ballast unit)
- fan controls and the I/O expander

■ Specifications 3
■ Lamp Replacement 4
■ Optical Parts Disassemblies 5
■ Optical Adjustments 7
■ Adjustments after Parts Replacement 8
■ Electrical Adjustments 9
● Circuit Adjustments 9
● Service Adjustment Data Table 14
● Test Points and Locations 26
■ Chassis Block Diagrams 27
■ Power Supply Lines 32
■ Waveforms 33
■ Control Port Functions 34
■ IC Block Diagrams 36
■ Service parts lists 37-78
● Electrical parts list _____ 37
● Mechanical parts list _____ 73
● Optical parts list _____ 75

Drawings & Diagrams _____ A1-A17

■ Parts description and reading in schematic diagram _____ A2
■ Schematic diagrams _____ A3-A10
■ Printed wiring board diagrams _____ A11-A16
■ Pins description of ICs, transistors, diodes _____ A17

■ Specifications

Projector Type	Multi-media Projector
Dimensions (W x H x D)	12.6" x 6.6" x 16.8" (319 mm x 168 mm x 429.5 mm)
Net Weight	19.2 lbs (8.7 kg) PLC-XP50/XP51, 16.3 lbs (7.4 kg) PLC-XP50L/XP51L
LCD Panel System	1.3" TFT Active Matrix type, 3 panels
Panel Resolution	1024 x 768 dots
Number of Pixels	2,359,296 (1024 x 768 x 3 panels)
Color System	PAL, SECAM, NTSC, NTSC4.43, PAL-M and PAL-N
High Definition TV Signal	480i, 480p, 575i, 575p, 720p, 1035i and 1080i
Scanning Frequency	H-sync. 15 ~ 100 KHz, V-sync. 50 ~ 100 Hz
Projection Lens	F1.8 ~ 2.1 lens with f=48.4 mm ~ 62.8 mm Motor zoom and focus
Throw distance	4.6' (1.4 m) ~ 47.3' (14.4 m)
Motorized Lens Shift	Up and Down
Projection Image Size (Diagonal)	Adjustable from 31" to 400"
Horizontal Resolution	800 TV lines (HDTV)
Projection Lamp	300 watt type
Input 1/Monitor Output Jacks	DVI Terminal (Digital) HDCP Compatible, HDB 15-pin Terminal (Analog) and Stereo Mini Type Jack (Audio)
Input 2 Jacks	BNC Type x 5 (G or VIDEO/Y, B or Cb/Pb, R or Cr/Pr, H and V), Stereo Mini Type Jack (Audio)
Input 3 Jacks	RCA Type x 3 (VIDEO/Y, Cb/Pb and Cr/Pr), RCA Type x 2 (Audio R and L) and DIN 4-pin (S-Video)
Other Jacks	DIN 8-pin (Control port), USB port (Series B receptacle), Wired Remote Jack and PJ-Net Organizer Connector
Built-in Speakers	INT. SP. Stereo (R and L), 2 watt RMS (T.H.D. 10%)
Feet Adjustment	0˚ to 10.5˚
Voltage and Power Consumption	AC 100 ~ 120 V (5.0 A Max. Ampere), 50 / 60 Hz (The U.S.A and Canada) AC 200 ~ 240 V (2.5 A Max. Ampere), 50 / 60 Hz (Continental Europe and The U.K.)
Operating Temperature	41 ˚F ~ 95 ˚F (5 ˚C ~ 35 ˚C)
Storage Temperature	14 ˚F ~ 140 ˚F (-10 ˚C ~ 60 ˚C)
Remote Control Transmitter	Power Source : AA, UM3 or R06 Type x 2 Operating Range : 16.4' (5m) / ±30˚ Dimensions : 2.0" x 1.4" x 7.6" (50mm x 36mm x 193mm) Net Weight : 0.35 lbs (160 g) (including batteries) Laser Pointer : Class II Laser (Max. Output : 1mW / Wave length : 650±20nm)
Accessories	Owner's Manual AC Power Cord Wireless/Wired Remote Control Transmitter and Batteries Remote Control Cable, VGA Cable, USB Cable, Control Cable for Serial port Protective Dust Cover Lens Cover (PLC-XP50/XP51) Lens Attachment (PLC-XP50L/XP51L)

● The specifications are subject to change without notice.

c UL US LISTED

This symbol on the nameplate means the product is Listed by Underwriters Laboratories Inc. It is designed and manufactured to meet rigid U.L. safety standards against risk of fire, casualty and electrical hazards.

CE

The CE Mark is a Directive conformity mark of the European Community (EC).

■ Lamp Replacement

* The replacement lamp is changed.

WARNING:

- For continued safety, replace with a lamp assembly of the same type.
- Allow the projector to cool for at least 45 minutes before you open the lamp cover. The inside of the projector can become very hot.
- Do not drop the lamp module or touch the glass bulb! The glass can shatter and cause injury.

ORDER REPLACEMENT LAMP

Type No.	Service Parts No.
POA-LMP81	610 314 9127

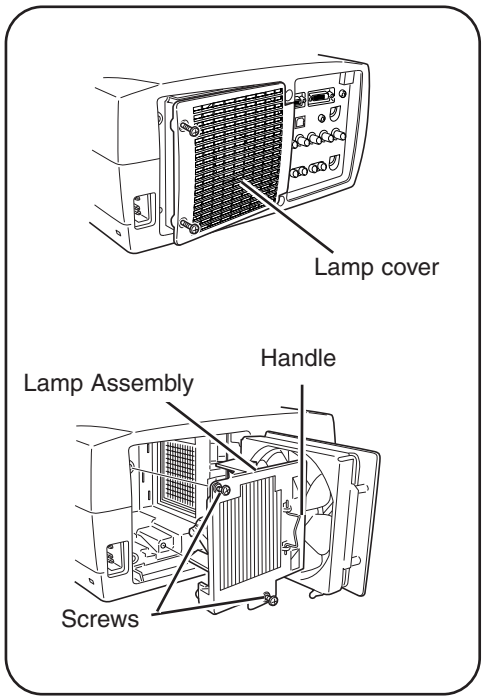

Procedure

1 Turn off the projector and disconnect the AC cord. Allow the projector to cool for at least 45 minutes.
2 Loosen 2 screws with a screwdriver and open the lamp cover.
3 Loosen 2 screws and pull out the lamp assembly by grasping the handle.
4 Replace the lamp assembly securely and tighten 2 screws.
5 Close the lamp cover and tighten 2 screws.
6 Connect the AC cord to the projector and turn on.

7 Reset the Lamp Replace Counter, see below explanation.

Note:

- Do not reset the Lamp Replace Counter, except after lamp is replaced.
- The projector can not be turned-on with lamp cover removed, because when the lamp cover is removed, the interlock switch is also released to switch off the mains power for safety.

How to reset Lamp Replace Counter

1 Turn the projector on, and press the **MENU** button and the on-screen menu will appear. Press the **POINT LEFT/RIGHT** buttons to move a red frame pointer to SETTING menu icon.
2 Press the **POINT DOWN** button to move a red frame pointer to “Lamp counter reset” and then press the **SELECT** button. The message “Lamp replace counter reset?” is displayed. Move the pointer to [Yes] and the press the **SELECT** button.
3 Another confirmation dialog box appears and select [Yes] to reset Lamp Replace Counter .

Please refer to the owners manual for further information.

Recommendation

Should the air filter become clogged with dust particles, it will reduce the cooling fan’s effectiveness and may result in internal heat build up and short lamp life. We recommend cleaning the air filter after the projection lamp is replaced.
Refer to “Air Filter Cleaning”.

How to check Lamp Replace Counter

The LAMP REPLACEMENT indicator will illuminate when the Lamp Replace Counter reaches 1500 hours. This is to indicate that lamp replacement is required.

You can check the lamp replace counter following to below procedure.

1 Press and hold the **POWER** button on the projector or the remote control unit for more than 20 seconds.
2 The Lamp replace Counter service menu appears on the center of the screen briefly.

Remark :
The upper display "Projector Counter" is not reset by resetting Lamp Replace Counter.

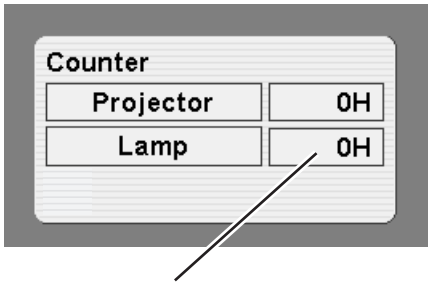

Lamp replace counter data

■ Optical Parts Disassemblies

* Following assemblies differ from previous assemblies for chassis No. MR3-XP5500, others are the same;
  - The direction of the phase sheet on the pre-polarized glass is changed.

Polarized Glass-Out and Wide view Glass removal

1 Remove 4 hex screws **A** and take the LCD/Prism ass'y off upward.
2 Remove 3 screws **B** and take the Glass Holder, and then pull the polarized Glass-Out and the wide view glass upwards off. These glasses are mounted for R, G and B LCD panels respectively.

Note:
To avoid the CG and focus alignments slipping off, please be careful to handle the LCD/Prism ass'y.

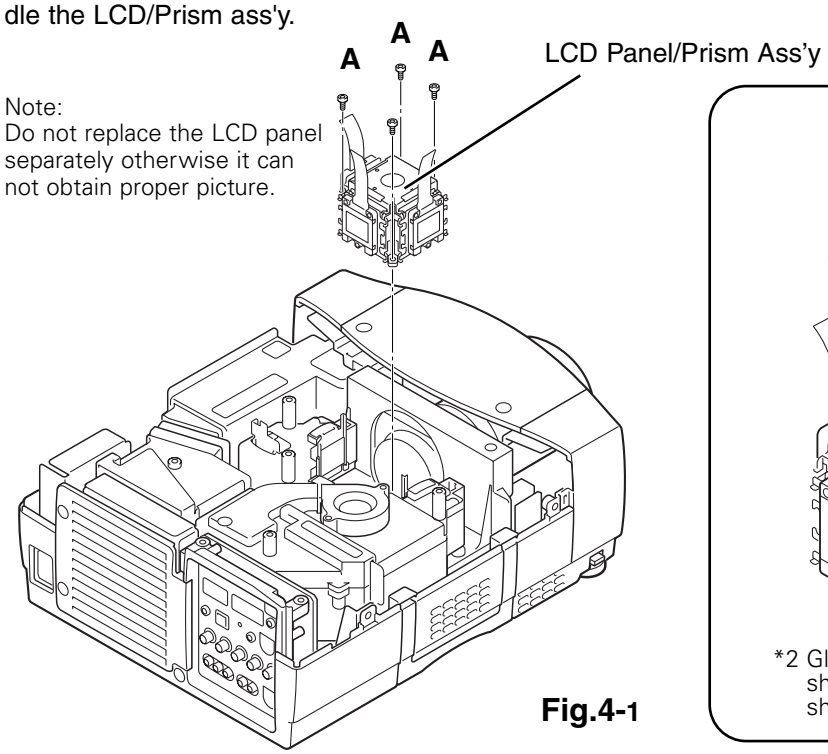

Fig.4-1

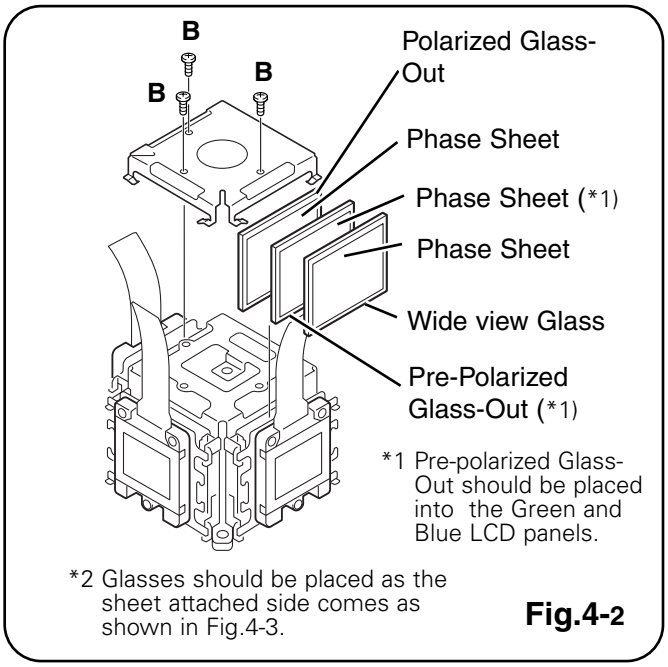

Fig.4-2

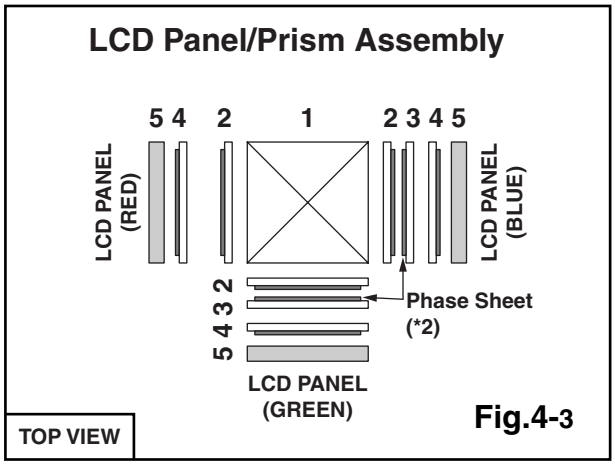

Fig.4-3

KEY No.	DESCRIPTION
1	PRISM ASSEMBLY
2	POLARIZED GLASS OUT
3	PRE-POLARIZED GLASS OUT(*2)
4	WIDE VIEW GLASS
5	LCD PANEL

(*2) PRE-POLARIZED GLASS
The glass should be placed the sheet attached side comes as shown in Fig.4-3.

* Following assemblies differ from previous assemblies for chassis No. MR3-XP5500 others are the same;
  - The optical filters are added.

Polarized Glass-In and Optical Filter-In(WV) removal

1 Remove each hex screw and pull the Polarized Glass-In ass'y upward.
2 Remove a stopper and take the glass off upward.

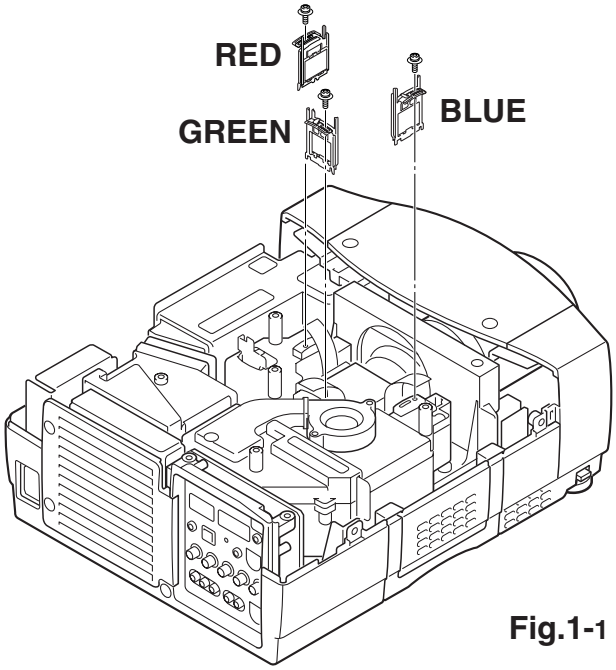

Fig.1-1

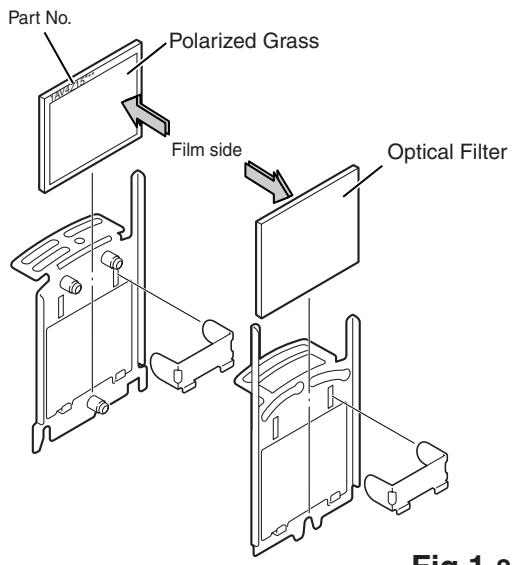

Fig.1-2

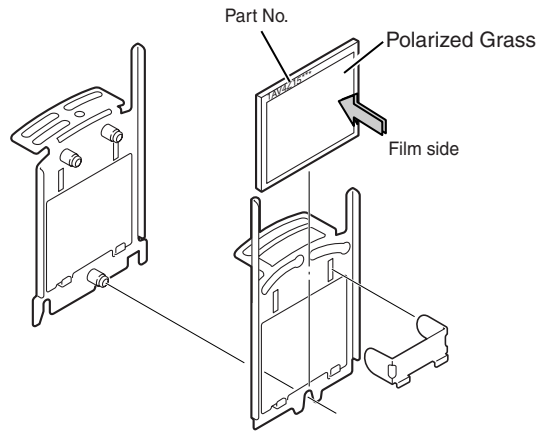

Fig.1-3

■ Optical Adjustments

* Following adjustment differs from previous adjustment for chassis No. MR3-XP5500 others are the same;
  - Contrast adjustment

Before taking optical adjustments below, remove the Cabinet Top and Main Board following to the “Mechanical Disassemblies”
Adjustments require a 2.0mm hex wrench and a slot screwdriver.
Note: Do not disconnect connectors **K8L**, **K8X**, **K8D**, **K8G** and **K8E** on the main board, because the projector can not turn on due to operate the power failure protection.

Contrast adjustment

[Before Adjustment]
- Input a 100% of black raster signal.

[R/G/B-CONTRAST ADJUSTMENT]

1 Loosen a screw **A** (**Fig.1-1**) on the polarized glass mounting base which you intend to adjust.
2 Turn the polarized glass mounting base with knob **B** as shown in **Fig.1-2** to obtain the darkest brightness on the screen. (The polarized glass and optical filter move together.)
3 Turn the optical filter mounting base with knob **C** as shown in **Fig.1-3** to obtain the black color uniformity on the screen.(Move only the optical filter.)
4 Tighten the screw **A** to fix the polarized glass mounting base.

Repeat steps 1 to 4 for remaining R, G or B contrast adjustment.

Note : **Blue contrast adjustment**
The 3rd step may be ignored because of no optical filter(WV).

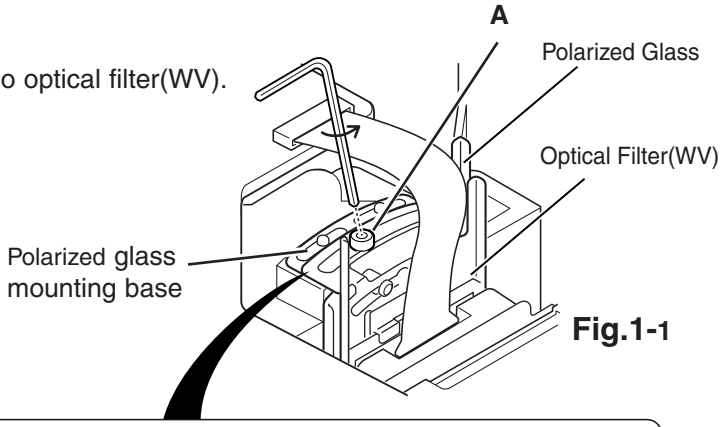

Fig.1-1

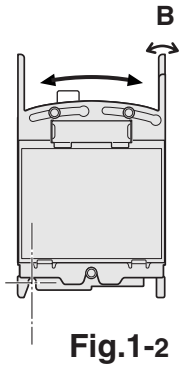

Fig.1-2

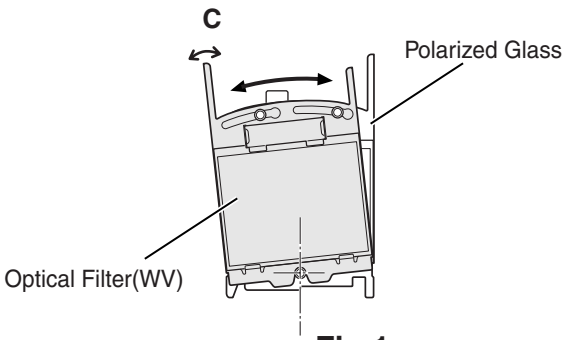

Fig.1-3

■ Adjustments after Parts Replacement

* Following adjustment differs from previous adjustment for chassis No. MR3-XP5500 others are the same;
  - Electrical adjustments

● : Adjustment necessary ❍ : Check necessary

		Disassembly / Replaced Parts								
		LCD/ Prism Ass'y	Condenser Lens	Relay Lens	Polarized glass			Power Board	Sub Power Board	Main Board
					R	G	B			
Optical Adjustments	Condenser lens adjustment	❍	●							
	Relay lens adjustment	❍		●						
	Contrast Adjustment									
	R-Contrast adjustment				●					
	G-Contrast adjustment					●				
	B-Contrast adjustment						●			
Electrical Adjustments	Output voltage adjustment							❍		
	+16 V adjustment							❍		
	Fan output voltage adjustment								●	●
	NRS adjustment									●
	Video center adjustment									●
	PC black level adjustment									●
	PC pedestal adjustment									●
	PC gain adjustment									●
	PC signal offset adjustment									●
	Video A/D reference voltage top & bottom adj.									●
	Video pedestal adjustment									●
	Video gain adjustment									●
	Video signal offset adjustment									●
	Component pedestal adjustment									●
	Component A/D reference voltage top adjustment									●
	Component gain adjustment									●
	RGB pedestal adjustment									●
	RGB A/D reference voltage top adjustment									●
	RGB gain adjustment									●
	Common center adjustment	●								●
	PC white balance adjustment	❍								❍
	Video white balance adjustment	❍								❍

■ Electrical Adjustments

* Following information differs from the chassis No. MR3-XP5500, others are the same;
  - the electrical adjustments.

● Circuit Adjustments

CAUTION: The each circuit has been made by the fine adjustment at factory. Do not attempt to adjust the following adjustments except requiring the readjustments in servicing otherwise it may cause loss of performance and product safety.

[Adjustment Condition]

● Input signal

Video signal ..... 1.0Vp-p/75Ω terminated, 16 steps gray scale, white 100% and black 0% pattern (Composite video signal)

Computer signal ..... 0.7Vp-p/75Ω terminated, 16 steps gray scale pattern (XGA)

Component Video signal..... 0.7Vp-p/75Ω terminated, 16 steps gray scale, white 100% and black 0% pattern (480i format)

RGB Video signal ..... 0.7Vp-p/75Ω terminated, 16 steps gray scale, white 100% and black 0% pattern (480p format)

● Picture control mode..... "STANDARD" mode unless otherwise noted.

16 steps gray scale pattern

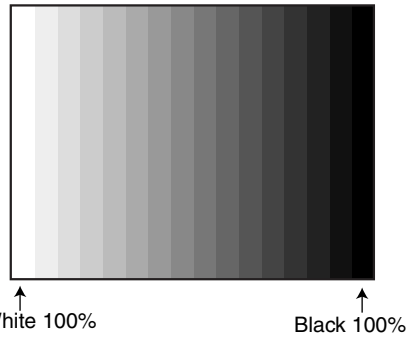

Note:
* Please refer to "Service Adjustment Menu Operation" in the original model's service manual for entering to the service mode and adjusting the service data.

1 Output voltage adjustment

After replacing the Power Board readjust the Output voltage adjustment as follows.

1. Connect a digital voltmeter to pin 1 (+) of **K6A** and chassis ground (-).
2. Adjust the voltage by using **VR601** on the power board as following.

	AC Input	Reading
	230V	370 ±2Vdc
or	120V	356 ±2Vdc

Caution:
Be sure to connect the lamp when taking this adjustment.

2 +16V adjustment

1. Receive the 16-step gray scale video signal with **Input 3 [VIDEO]** mode.
2. Connect a digital voltmeter to pin 3 (+) of **CN6A** and chassis ground (-).
3. Adjust the voltage to be **16.0** ±0.1Vdc by using **VR681** on the power board.

Note:
The Power Board for replacing is already adjusted in the factory, so it is not required to perform readjustment of item1 and 2.

3 Fan Voltage adjustment

1. Enter the service mode.
2. Connect a digital multimeter to test point "**TPFN**✳" (+) and chassis ground (-). (as shown below)
3. Select group no. "**11**", item no. "**24**" and change data value of the fan number. (as shown below)
4. Select item no."**41**" and change data value to adjust the fan max. output voltage to be **14.0** ±0.1V.
5. Select item no."**42**" and change data value to adjust the fan min. output voltage to be **A** ±0.1V.(as shown below)
6. Each fan should be adjusted refer to item 2 - 5.

Note:
The location of each fan is refer to page-__ "Fans Location".

FAN No.	Group/Item	Data	Test point	**A** Voltage
FN901	11 / 24	0	TPFN1	6.5
FN902	11 / 24	0	TPFN1	6.5
FN903	11 / 24	2	TPFN3	6.0
FN904	11 / 24	5	TPFN4	6.0
FN905	11 / 24	1	TPFN5	6.5
FN906	11 / 24	4	TPFN6	6.0
FN907	11 / 24	3	TPFN7	6.0

4 NRS adjustment

1. Receive the 16-step gray scale computer signal with **Input 1 [RGB(Analog)]** mode.
2. Enter the service mode.
3. Connect an oscilloscope to test point "**TPNRS**" (+) and chassis ground (-).
4. Select group no. "**5**", item no. "**4**" and change data value to adjust amplitude "**a**" to be **2.0** ±0.1V.
5. Select item no. "**3**" and change data value to adjust amplitude "**b**" to be **7.0** ±0.1V.

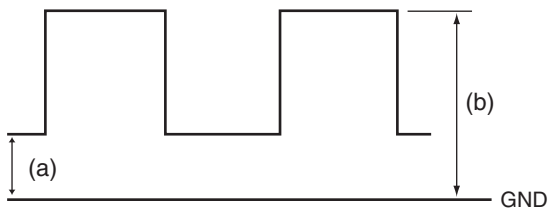

5 Video center adjustment

1. Receive the 16-step gray scale computer signal with **Input 1 [RGB(Analog)]** mode.
2. Enter the service mode.

3. Connect a digital voltmeter to test point "**TPV1G**" (+) and chassis ground (-).
4. Select group no. "**5**", item no. "**5**" and change data value to adjust the voltage to be **6.50** ±0.1Vdc.
5. Connect a digital voltmeter to test point "**TPV1B**" (+) and chassis ground (-).
6. Select item no. "**6**" and change data value to adjust the voltage to be **6.50** ±0.1Vdc.
7. Connect a digital voltmeter to test point "**TPV1R**" (+) and chassis ground (-).
8. Select item no. "**7**" and change data value to adjust the voltage to be **6.50** ±0.1Vdc.

9. Connect a digital voltmeter to test point "**TPV2G**" (+) and chassis ground (-).
10. Select group no. "**5**", item no. "**8**" and change data value to adjust the voltage to be **7.50** ±0.1Vdc.
11. Connect a digital voltmeter to test point "**TPV2B**" (+) and chassis ground (-).
12. Select item no. "**9**" and change data value to adjust the voltage to be **7.50** ±0.1Vdc.
13. Connect a digital voltmeter to test point "**TPV2R**" (+) and chassis ground (-).
14. Select item no. "**10**" and change data value to adjust the voltage to be **7.50** ±0.1Vdc.

6 PC black Level adjustment

1. Receive the 16-step gray scale computer signal with **Input 1 [RGB(Analog)]** mode.
2. Enter the service mode.
3. Connect an oscilloscope to test point "**TP35G**" (+) and chassis ground (-).
4. Select group no. "**5**", item no. "**0**" and change data value to adjust amplitude "**a**" to be **10.0** ±0.1V.
3. Connect an oscilloscope to test point "**TP35B**" (+) and chassis ground (-).
4. Select item no. "**1**" and change data value to adjust amplitude "**a**" to be **10.0** ±0.1V.
3. Connect an oscilloscope to test point "**TP35R**" (+) and chassis ground (-).
4. Select item no. "**2**" and change data value to adjust amplitude "**a**" to be **10.0** ±0.1V.

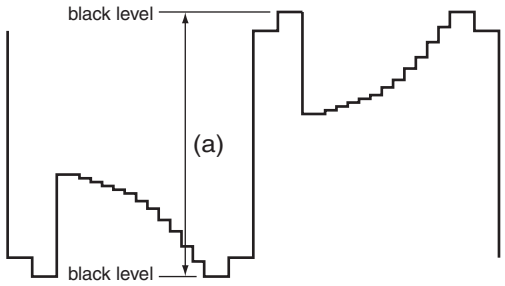

7 PC pedestal adjustment

1. Receive the 16-step gray scale computer signal with **Input 1 [RGB(Analog)]** mode.
2. Enter the service mode.
3. Select group no. "**500**", item no. "**0**" and change data value to adjust the **green** noise on the white 0% area of screen to the first point of the deepest green.
4. Select item no. "**1**" and change data value to adjust the **blue** noise on the white 0% area of screen to the first point of the deepest blue.
4. Select item no. "**2**" and change data value to adjust the **red** noise on the white 0% area of screen to the first point of the deepest red.

8 PC gain adjustment

1. Receive the 16-step gray scale computer signal with **Input 1 [RGB(Analog)]** mode.
2. Enter the service mode.
3. Connect an oscilloscope to test point "**TP35G**" (+) and chassis ground (-).
4. Select group no. "**4**", item no. "**3**" and change data value to adjust waveform "**a**" to be minimum amplitude.
5. Connect an oscilloscope to test point "**TP35B**" (+) and chassis ground (-).
6. Select item no. "**4**" and change data value to adjust waveform "**a**" to be minimum amplitude.
7. Connect an oscilloscope to test point "**TP35R**" (+) and chassis ground (-).
8. Select item no. "**5**" and change data value to adjust waveform "**a**" to be minimum amplitude.

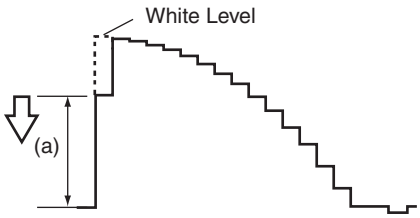

9 PC signal offset adjustment

1. Receive the 16-step gray scale computer signal with **Input 1 [RGB(Analog)]** mode.
2. Enter the service mode.
3. Connect an oscilloscope to test point "**TP35G**" (+) and chassis ground (-).
4. Select group no. "**4**", item no. "**6**" and adjust the amplitude "**a**" to be **1.5** ±0.1V by changing the Data value.

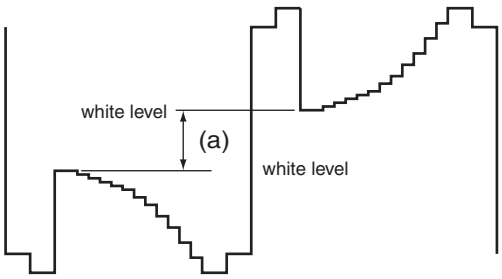

10 Video A/D reference voltage (bottom side) adjustment

1. Receive the 16-step gray scale composite video signal with **Input 3 [Video]** mode.
2. Enter the service mode.
3. Connect a digital voltmeter to test point "**TPVRB**" (+) and chassis ground (-).
4. Select group no. "**5**", item no. "**17**" and change data value to adjust the voltage to be **0.70** ±0.02Vdc.

11 Video Y pedestal adjustment

1. Receive the black 0% composite video signal with **Input 3 [Video]** mode.
2. Enter the service mode.
3. Select group no. "**5**", item no. "**11**" and change data value to adjust the **green** noise on the screen to the deepest green.

12 Video A/D reference voltage (top side) adjustment

1. Receive the white 100% composite video signal with **Input 3 [Video]** mode.
2. Enter the service mode.
3. Select group no. "**5**", item no. "**18**" and change data value to adjust the **magenta** noise on the screen to the deepest magenta.

13 Video Cb/Cr pedestal adjustment

1. Receive the black 0% composite video signal with **Input 3 [Video]** mode.
2. Enter the service mode.
3. Select group no. "**5**", item no. "**12**" and change data value to adjust the **blue** noise on the screen to the deepest blue.
4. Select group no. "**5**", item no. "**13**" and change data value to adjust the **red** noise on the screen to the deepest red.

14 Video gain adjustment

1. Receive the 16-step gray scale composite video signal with **Input 3 [video]** mode.
2. Enter the service mode.
3. Connect an oscilloscope to test point "**TP35G**" (+) and chassis ground (-).
4. Select group no. "**4**", item no. "**3**" and change data value to adjust waveform "**a**" to be minimum amplitude.
5. Connect an oscilloscope to test point "**TP35B**" (+) and chassis ground (-).
6. Select item no. "**4**" and change data value to adjust waveform "**a**" to be minimum amplitude.
7. Connect an oscilloscope to test point "**TP35R**" (+) and chassis ground (-).
8. Select item no. "**5**" and change data value to adjust waveform "**a**" to be minimum amplitude.

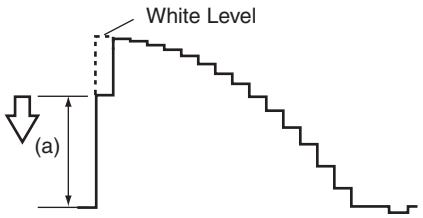

15 Video signal offset adjustment

1. Receive the 16-step gray scale composite video signal with **Input 3 [video]** mode.
2. Enter the service mode.
3. Connect an oscilloscope to test point "**TP35G**" (+) and chassis ground (-).
4. Select group no. "**4**", item no. "**6**" and adjust the amplitude "**a**" to be **1.5** ±0.1V by changing the Data value.

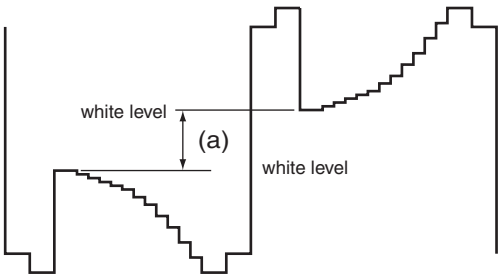

16 Component Y pedestal adjustment

1. Receive the black 0% component 480i video signal with **Input 3 [Component]** mode.
2. Enter the service mode.
3. Select group no. "**5**", item no. "**11**" and change data value to adjust the **green** noise on the screen to the deepest green.

17 Component A/D reference voltage (top side) adjustment

1. Receive the white 100% component 480i video signal with **Input 3 [Component]** mode.
2. Enter the service mode.
3. Select group no. "**5**", item no. "**18**" and change data value to adjust the **magenta** noise on the screen to the deepest magenta.

18 Component Cb/Cr pedestal adjustment

1. Receive the black 0% component 480i video signal with **Input 3 [Component]** mode.
2. Enter the service mode.
3. Select group no. "**5**", item no. "**12**" and change data value to adjust the **blue** noise on the screen to the deepest blue.
4. Select item no. "**13**" and change data value to adjust the **red** noise on the screen to the deepest red.

19 Component gain adjustment

1. Receive the 16-step gray scale component 480i signal with **Input 3 [Component]** mode.
2. Enter the service mode.
3. Connect an oscilloscope to test point "**TP35G**" (+) and chassis ground (-).
4. Select group no. "**4**", item no. "**3**" and change data value to adjust waveform "**a**" to be minimum amplitude.
5. Connect an oscilloscope to test point "**TP35B**" (+) and chassis ground (-).
6. Select item no. "**4**" and change data value to adjust waveform "**a**" to be minimum amplitude.
7. Connect an oscilloscope to test point "**TP35R**" (+) and chassis ground (-).
8. Select item no. "**5**" and change data value to adjust waveform "**a**" to be minimum amplitude.

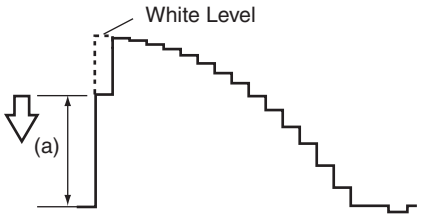

20 RGB G pedestal adjustment

1. Receive the black 0% RGB 480p video signal with **Input 2 [RGB]** mode.
2. Enter the service mode.
3. Select group no. "**5**", item no. "**11**" and change data value to adjust the **green** noise on the screen to the deepest green.

21 RGB A/D reference voltage (top side) adjustment

1. Receive the white 100% RGB 480p video signal with **Input 2 [RGB]** mode.
2. Enter the service mode.
3. Select group no. "**5**", item no. "**18**" and change data value to adjust the **magenta** noise on the screen to the deepest magenta.

22 RGB B/R pedestal adjustment

1. Receive the black 0% RGB 480p video signal with **Input 2 [RGB]** mode.
2. Enter the service mode.
3. Select group no. "**5**", item no. "**12**" and change data value to adjust the **blue** noise on the screen to the deepest blue.
4. Select item no. "**13**" and change data value to adjust the **red** noise on the screen to the deepest red.

23 RGB gain adjustment

1. Receive the 16-step gray scale RGB 480p signal with **Input 2 [RGB]** mode.
2. Enter the service mode.
3. Connect an oscilloscope to test point "**TP35G**" (+) and chassis ground (-).
4. Select group no. "**4**", item no. "**3**" and change data value to adjust waveform "**a**" to be minimum amplitude.
5. Connect an oscilloscope to test point "**TP35B**" (+) and chassis ground (-).
6. Select item no. "**4**" and change data value to adjust waveform "**a**" to be minimum amplitude.
7. Connect an oscilloscope to test point "**TP35R**" (+) and chassis ground (-).
8. Select item no. "**5**" and change data value to adjust waveform "**a**" to be minimum amplitude.

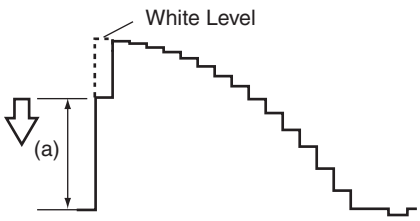

24 Common center adjustment

1. Receive the 16-step gray scale computer signal with **Input 1 [RGB(Analog)]** mode.
2. Enter the service mode.
3. Project only **green** light component to the screen.
4. Select group no. "**4**", item no. "**51**" and change data value to obtain the minimum flicker on the screen.
5. Project only **blue** light component to the screen.
6. Select item no. "**52**" and change data value to obtain the minimum flicker on the screen.
7. Project only **red** light component to the screen.
8. Select item no. "**53**" and change data value to obtain the minimum flicker on the screen.

25 White balance adjustment

[PC WHITE BALANCE ADJUSTMENT]

1. Receive the 16-step gray scale computer signal with **Input 1 [RGB(Analog)]** mode.
2. Enter the service mode, select group no. "**4**", item no. "**7**" (Blue) or "**8**" (Red), and change data values respectively to make a proper white balance.

[AV WHITE BALANCE ADJUSTMENT]

3. Receive the 16-step gray scale composite video signal with **Input 3 [Video]** mode.
4. Enter the service mode, select group no. "**4**", item no. "**7**" (Blue) or "**8**" (Red), and change data values respectively to make a proper white balance.

Confirm that the same white balance is obtained in video and computer input.

NOTE ON WHITE UNIFORMITY ADJUSTMENT

If you find the color shading on the screen, please adjust the white uniformity by using the proper computer and "Color Shading Correction" software supplied separately. The software can be ordered as follows;

COLOR SHADING CORRECTION SOFTWARE
Service Parts No. 645 056 6288
or 645 066 7428

● Service Adjustment Data Table

These initial values are the reference data written from the CPU ROM to memory IC when replaced new memory IC. The adjustment items indicated with "✻" are required to readjust following to the "Electrical adjustments". Other items should be used with the initial data value.

No.	Adjustment Item	Initial Value	Range	Input source / Description
Group: 1 uPD64083				
0	NRMD	0	0 ~ 3	
1	HDP	4	0 ~ 7	
2	CDL	4	0 ~ 7	
3	DYCOR	4	0 ~ 15	DY detect coring level (Y movement detect coring)
4	DYGAIN	15	0 ~ 15	DY detect gain (Y movement detect gain)
5	DCCOR	2	0 ~ 15	DC detect coring level (C movement detect coring)
6	DCGAIN	13	0 ~ 15	DC detect gain (C movement detect gain)
7	VAPGAIN	3	0 ~ 15	
8	VAPINV	2	0 ~ 15	
9	YPFT	3	0 ~ 3	
10	YPFG	12	0 ~ 15	
11	V1PSEL	3	0 ~ 3	
12	VEGSEL	3	0 ~ 3	
13	CC3N	0	0 or 1	
14	SELD2FH	1	0 or 1	
15	SELD1FL	1	0 or 1	
16	YHCOR	0	0 ~ 3	
17	HPLLFG	1	0 or 1	
18	PLLFS	1	0 or 1	
19	KILR	3	0 ~ 15	
20	HSSL	12	0 ~ 15	
21	VSSL	3	0 ~ 15	
22	BGPS	7	0 ~ 15	
23	BGPW	3	0 ~ 15	
Group: 2 TB1274AF				
0	TINT	32	0 ~ 63	
1	SHP_EQ	2	0 ~ 3	
2	SHP_FO	2	0 ~ 3	
3	SHP_GAIN	11 / 11 / 8 / 6 6 / 9 / 8 / 8	0 ~ 15	Video NT / PAL,PALM,PALN / SECAM,BW60,BW50 / NT443 / PAL60 / S-Video / YCbCr / Scart
4	Y_OUT_LEVEL 0.7V	33 / 31 / 32 / 32 / 35 / 31 / 31 / 32 / 32 32 / 35 / 38	0 ~ 63	Video NT / NT443 / PAL,PALM,PALN / PAL60 / SECAM,BW / S-Video NT,BW / NT443 / PAL,PALM,PALN / PAL60 SECAM / YCbCr / Scart
5	C_OUT_LEVEL 0.6V	25 / 24 / 31 / 25 / 41 / 26 / 26 / 32 / 25 / 42 / 35 / 35 / 35	0 ~ 63	Video NT / NT443 / PAL,PALM,PALN / PAL60 / SECAM,BW / S-Video NT,BW / NT443 / PAL,PALM,PALN / PAL60 SECAM / 480i / 575i / Scart
6	Y_DELAY	5 / 5 / 4 / 4 / 4 / 4 / 4 / 3 / 3 / 4	0 ~ 15	Video NT,BW60 / PAL,PALM,PALN,BW50 / SECAM / NT443 / PAL60 S-Video NT,BW60 / PAL,PALM,PALN,BW50 / SECAM / NT443 / PAL60
7	COL_SYS	-	-	Read Only
8	X'TAL	-	-	
9	NOISE_DET	-	-	
10	V_FREQ	-	-	
11	Vert. Std	-	-	
12	CID	-	-	
13	V_SIG	-	-	
14	MVM	0	0 or 1	
15	AFC_GAIN	1	0 ~ 3	
16	SECAM_GP, SECAM_ID	7	0 ~ 15	
17	LPF	1 / 1	0 or 1	Not-Scart / Scart
Group: 3 CXA2151				
0	MATOUT	0 / 0 / 0 / 2 / 1	0 ~ 3	RGB / YCbCr 480i&575i / YCbCr 480p&575p / YCbCr 1080i&720p / YCbCr 1035i
1	V_TC	0 / 0 / 0 / 0 / 0 / 0 / 0 / 0	0 ~ 3	RGB-480i,575i / 480p,575p / 720p,1080i / 1035i YCbCr-480i,575i / 480p,575p / 720p,1080i / 1035i
2	HSEP_SEL	0 / 0 / 0 / 0 / 0 / 0 / 0 / 0	0 or 1	RGB-480i,575i / 480p,575p / 720p,1080i / 1035i YCbCr-480i,575i / 480p,575p / 720p,1080i / 1035i
3	HD_TC	0 / 0 / 0 / 0 / 0 / 0 / 0 / 0	0 or 1	RGB-480i,575i / 480p,575p / 720p,1080i / 1035i YCbCr-480i,575i / 480p,575p / 720p,1080i / 1035i
4	HS_MASK	0 / 0 / 0 / 0 / 0 / 0 / 0 / 0	0 or 1	RGB-480i,575i / 480p,575p / 720p,1080i / 1035i YCbCr-480i,575i / 480p,575p / 720p,1080i / 1035i
5	MACRO	1 / 1 / 0 / 1 / 1 / 0	0 or 1	RGB-480i,575i / 480p,575p / 720p,1035i,1080i YCbCr-480i,575i / 480p,575p / 720p,1035i,1080i
6	CB_GAIN	6 / 6 / 6 / 6 / 6	0 ~ 15	RGB / YCbCr-480i,575i / YCbCr-480p,575p / YCbCr-1080i,720p / YCbCr-1035i
7	CR_GAIN	6 / 6 / 6 / 6 / 6	0 ~ 15	RGB / YCbCr-480i,575i / YCbCr-480p,575p / YCbCr-1080i,720p / YCbCr-1035i
8	Y_GAIN	6 / 6 / 6 / 6 / 6	0 ~ 15	RGB / YCbCr-480i,575i / YCbCr-480p,575p / YCbCr-1080i,720p / YCbCr-1035i
9	GAIN_SEL	1 / 1	0 ~ 3	without RGB Video / RGB Video

No.	Adjustment Item	Initial Value	Range	Input source / Description	
Group: 4 PANEL (L3E07070, L3E06100)					
0	G_SUB_BRT	0 / 0	0 ~ 1023	PC / DVI, HDCP, AV, RGB-VIDEO White 100% Adjustment	
1	B_SUB_BRT	0 / 0	0 ~ 1023		
2	R_SUB_BRT	0 / 0	0 ~ 1023		
3	G_SUB_GAIN	560 / 560 / 490 / 560	0 ~ 1023	PC / AV, RGB-VIDEO / DVI, HDCP / Component	※ Gain adjustment [G]
4	B_SUB_GAIN	560 / 560 / 490 / 560	0 ~ 1023		※ Gain adjustment [B]
5	R_SUB_GAIN	560 / 560 / 490 / 560	0 ~ 1023		※ Gain adjustment [R]
6	Standard G_GAMMA SHIFT	512 / 512	0 ~ 1023	PC(A, D) / AV, RGB-VIDEO, HDCP	※ Gamma signal offset adjustment
7	Standard B_GAMMA SHIFT	512 / 512	0 ~ 1023		※ White balance adjustment [B]
8	Standard R_GAMMA SHIFT	512 / 512	0 ~ 1023		※ White balance adjustment [R]
9	Real/Cinema G_Gamma_ SH	-3 / -3	-512 ~ 511	PC(A, D) / AV, RGB-VIDEO, HDCP	
10	Real/Cinema B_Gamma_ SH	-2 / -2	-512 ~ 511		
11	Real/Cinema R_Gamma_ SH	0 / 0	-512 ~ 511		
12	H_Crosstalk_R_Center	5	0 ~ 2047		
13	H_Crosstalk_G_Center	5	0 ~ 2047		
14	H_Crosstalk_B_Center	5	0 ~ 2047		
15	P_Ghost_Correction_R	4	0 ~ 2047		
16	P_Ghost_Correction_G	4	0 ~ 2047		
17	P_Ghost_Correction_B	4	0 ~ 2047		
18	R_V-line_Shade_Offset_1	16	0 ~ 31		
19	R_V-line_Shade_Offset_2	16	0 ~ 31		
20	R_V-line_Shade_Offset_3	16	0 ~ 31		
21	R_V-line_Shade_Offset_4	16	0 ~ 31		
22	R_V-line_Shade_Offset_5	16	0 ~ 31		
23	R_V-line_Shade_Offset_6	16	0 ~ 31		
24	G_V-line_Shade_Offset_1	16	0 ~ 31		
25	G_V-line_Shade_Offset_2	16	0 ~ 31		
26	G_V-line_Shade_Offset_3	16	0 ~ 31		
27	G_V-line_Shade_Offset_4	16	0 ~ 31		
28	G_V-line_Shade_Offset_5	16	0 ~ 31		
29	G_V-line_Shade_Offset_6	16	0 ~ 31		
30	B_V-line_Shade_Offset_1	16	0 ~ 31		
31	B_V-line_Shade_Offset_2	16	0 ~ 31		
32	B_V-line_Shade_Offset_3	16	0 ~ 31		
33	B_V-line_Shade_Offset_4	16	0 ~ 31		
34	B_V-line_Shade_Offset_5	16	0 ~ 31		
35	B_V-line_Shade_Offset_6	16	0 ~ 31		
36	V-line_Shade_Correction_R0	3	0 ~ 255		
37	V-line_Shade_Correction_R1	2	0 ~ 255		
38	V-line_Shade_Correction_R2	0	0 ~ 255		
39	V-line_Shade_Correction_R3	255	0 ~ 255		
40	V-line_Shade_Correction_R4	0	0 ~ 255		
41	V-line_Shade_Correction_G0	3	0 ~ 255		
42	V-line_Shade_Correction_G1	2	0 ~ 255		
43	V-line_Shade_Correction_G2	0	0 ~ 255		
44	V-line_Shade_Correction_G3	255	0 ~ 255		
45	V-line_Shade_Correction_G4	0	0 ~ 255		
46	V-line_Shade_Correction_B0	3	0 ~ 255		
47	V-line_Shade_Correction_B1	2	0 ~ 255		
48	V-line_Shade_Correction_B2	0	0 ~ 255		
49	V-line_Shade_Correction_B3	255	0 ~ 255		
50	V-line_Shade_Correction_B4	0	0 ~ 255		
51	G_LCCOM	163	0 ~ 255	G Common Center Adjustment	※ Common center adjustment [G]
52	B_LCCOM	163	0 ~ 255	B Common Center Adjustment	※ Common center adjustment [B]
53	R_LCCOM	163	0 ~ 255	R Common Center Adjustment	※ Common center adjustment [R]
54	G_V_COM_CEILING	0	-128 ~ 127	G Common Center Adjustment (Difference between Normal mode and Ceiling mode)	
55	B_V_COM_CEILING	0	-128 ~ 127	G Common Center Adjustment (Difference between Normal mode and Ceiling mode)	
56	R_V_COM_CEILING	0	-128 ~ 127	G Common Center Adjustment (Difference between Normal mode and Ceiling mode)	
57	Ghost_Correction_block_R	0 / 3	0 ~ 2047	without Micro-lens / with Micro-lens	
58	Ghost_Correction_block_G	0 / 3	0 ~ 2047	without Micro-lens / with Micro-lens	
59	Ghost_Correction_block_B	0 / 3	0 ~ 2047	without Micro-lens / with Micro-lens	
60	DXOUT R	443	0 ~ 1023		
61	DXOUT G	443	0 ~ 1023		
62	DXOUT B	443	0 ~ 1023		
Group: 5 DAC					
0	REF_G	105	0 ~ 255	DAC1	※ Black Level Adjustment [G]
1	REF_B	105	0 ~ 255	DAC1	※ Black Level Adjustment [B]
2	REF_R	105	0 ~ 255	DAC1	※ Black Level Adjustment [R]
3	NRSB	155	0 ~ 255	DAC1 NRSB	※ NRS adjustment (High)
4	NRSA	100	0 ~ 255	DAC1 NRSA	※ NRS adjustment (Low)
5	G_V1	134	0 ~ 255	DAC2	※ Video center adjustment [G]
6	B_V1	134	0 ~ 255	DAC2	※ Video center adjustment [B]

No.	Adjustment Item	Initial Value	Range	Input source / Description
7	R_V1	134	0 ~ 255	DAC2 ※ Video center adjustment [R]
8	G_V2	154	0 ~ 255	DAC2 ※ Video center adjustment [G]
9	B_V2	154	0 ~ 255	DAC2 ※ Video center adjustment [B]
10	R_V2	154	0 ~ 255	DAC2 ※ Video center adjustment [R]
11	G_CLMP	125 / 210 / 210 / 210	0 ~ 255	PC(not RGB Video) / RGB Video / Video, SCART / Component ※ Y/G pedestal adjustment
12	B_CLMP	181 / 160 / 220 / 225	0 ~ 255	PC(not RGB Video) / RGB Video / Video, SCART / Component ※ Cb/B pedestal adjustment
13	R_CLMP	184 / 160 / 220 / 225	0 ~ 255	PC(not RGB Video) / RGB Video / Video, SCART / Component ※ Cr/R pedestal adjustment
14	SGAIN +	-	0 ~ 255	
15	SGAIN -	128	0 ~ 255	
16	LF_LEV	255 / 255 / 255 / 0 / 0	0 ~ 255	SCART / RGB-480i,575i / YCbCr-480i,575i / VIDEO,S-VIDEO / Others
17	DAC_VRB	35	0 ~ 255	※ A/D reference voltage bottom adjustment
18	DAC_GY	110 / 115 / 115	0 ~ 255	Composite, SCART / Component / RGB Video ※ A/D reference voltage top adjustment
19	DAC_BCB	110 / 115 / 115	0 ~ 255	Composite, SCART / Component / RGB Video
20	DAC_RCR	110 / 115 / 115	0 ~ 255	Composite, SCART / Component / RGB Video
Group: 6 TC90A69F				
0	Y-EQ_GAIN	3	0 ~ 3	
1	Y-EQ_N_C_LIM	3	0 ~ 3	
2	V-ENH_GAIN	4	0 ~ 7	
3	V_ENH_CORING	2	0 ~ 3	
4	NTSC443_SW	1	0 ~ 1	0 : NTSC4.43 1 : PAL60 (Available for NTSC4.43)
Group: 10 Option				
0	Lamp Time Monitor	-	0 ~ 8738	Read only
1	RS232C Baudrate	0	0 ~ 1	0: 19200bps 1: 9600bps
2	Shootout Mode	0	0 ~ 1	0: Disable 1: Enable
3	Cooling Time	3	0 ~ 15	Set cooling period, 1: 30 sec. 3: 90 sec. 15: 450 sec. 0: continuos
4	Hi-Land SW	0	0 ~ 1	0: Normal 1: Highland mode (Fan spin speed max.)
5	V-Douki SW	0	0 ~ 1	0: Synchronized Vertical 1: non-synchronized Vertical
6	Lamp Total Time	-	0 ~ 65535	Read only
7	Net Board RESET	1	0 ~ 1	0: Disable 1: Enable
8	Keystone Option	0	0 ~ 1	0: Maximum correction (fix) 1: Changeable for Input signal
9	Syukka SW	0	0 ~ 10	Set 10 to Shipping Condition
10	Color Shading SW	1	0 ~ 1	0: OFF 1: ON
11	RC Enable/Disable	0	0 ~ 3	0: Both enable 1: Front Disable 2: Rear Disable 3: Both Disable
12	Lamp Dim Level	15	0 ~ 15	0: the darkest 1: the brightest
13	Lamp Warning Time	1500	0 ~ 65535	Unit = hour
14	Forced NOBRAND	0	0 ~ 1	0: Normal 1: No brand
15	Forced Video Mute Off	0	0 ~ 1	0: Video Mute ON 1: Video Mute OFF
16	ANZEN FAN Control Fix SW	0	0 ~ 4	0: Normal 1: Normal min. 2: Normal max 3: Eco min. 4: Eco max
17	DJTR_SW	-	-	Not used
18	HDCP Option	0	0 ~ 3	0: XGA 1: Not XGA
19	HDCP Reset	0	0 ~ 10	Set 10 and write EDID Data for HDCP
20	Auto PC Adj. SW	0	0 ~ 1	0: valid, 1: invalid
21	Gamma SW	1	0 ~ 1	0: invalid, 1: valid
Group: 11 FAN (Fan Control)				
0	FAN_TEMP_A_WARNING	460	30 ~ 1000	Temperature to judge abnormal A (Not memorized) Inside projector
1	FAN_TEMP_B_WARNING	800	30 ~ 1000	Temperature to judge abnormal A (Not memorized) Lamp
2	FAN_TEMP_C_WARNING	510	30 ~ 1000	Temperature to judge abnormal A (Not memorized) LCD Panel
3	FAN_TEMP_B-A_WARNING	520	0 ~ 1000	
4	FAN_TEMP_C-A_WARNING	200	0 ~ 1000	
5	FAN_CONTROL_SW	0	0 or 1	0: Auto-control all Fans 1: Manual control all Fans
6	FAN1 Manual Out	1350	0 ~ 2000	These are effective when FAN_CONTROL_SW is set to "1".
7	FAN2 Manual Out	1350	0 ~ 2000	
8	FAN4 Manual Out	1350	0 ~ 2000	
9	FAN5 Manual Out	1350	0 ~ 2000	
10	FAN6 Manual Out	1350	0 ~ 2000	
11	FAN7 Manual Out	1350	0 ~ 2000	
12	FAN1 Now Out	-		Read only Reading voltage of each Fan
13	FAN2 Now Out	-		
14	FAN4 Now Out	-		
15	FAN5 Now Out	-		
16	FAN6 Now Out	-		
17	FAN7 Now Out	-		
18	Temp Monitor A	-	-	Read only
19	Temp Monitor B	-	-	
20	Temp Monitor C	-	-	
21	Pressure Monitor	-	-	Read only
22	FAN_BALLAST_SW	0	0 or 1	Fan control depend on Ballast Output Voltage 0: OFF 1: ON
23	Service Target MODE	-1	-1 ~ 3	-1: Current Mode 0: Normal Mode 1: Eco Mode
24	Service Target FAN	0	0 ~ 5	Service target 0: FAN1 1: FAN2 2: FAN4 3: FAN5 4: FAN6 5: FAN7 ※ Fan adjustment [Setting]
25	Control Switch	0		Control Switch for the operated Fan 0: Auto 1: Manual
26	Temp Source Range High	400		Control range of Temperature for Temperature Sensor A
27	Temp Source Range Low	330		

No.	Adjustment Item	Initial Value	Range	Input source / Description
28	Temp Fan-Out Range High	1350 / 1000		Control range of Fan control voltage by Temperature Sensor A
29	Temp Fan-Out Range Low	780 / 700 / 1000		
30	Diff (UP)Src Range High	180		Difference of temperature between temp-A and temp-C for Fan additional voltage (upward)
31	Diff (UP)Src Range Low	150		
32	Diff(DWN)Src Range High	80		Difference of temperature between temp-A and temp-C for Fan additional voltage (downward)
33	Diff(DWN)Src Range Low	60		
34	Press Source Range Low			Control range of Pressure Sensor
35	Press Source Range High			
36	Press FanAdd Range High	0		Control range of Fan additional voltage by Pressure sensor
37	Press FanAdd Range Low	500		
38	Ceiling-Add			Fan additional voltage when ceiling
39	Fan Out Limit Volt MAX	1400		Limit voltage of current Fan output voltage
40	Fan Out Limit Volt MIN.	650		
41	Fan Out Limit DAC MAX		0 ~ 255	Limit of DAC output for current Fan ※ Fan adjustment [max.]
42	Fan Out Limit DAC MIN.		0 ~ 255	※ Fan adjustment [min.]
43	Manual Out		0 ~ 2000	Output voltage of current Fan at manual mode
44	Now Out	-		Reading voltage of current Fan
Group: 12 PC Real / AV Cinema				
0	PC Real Contrast	32	0 ~ 63	
1	PC Real Brightness	32	0 ~ 63	
2	PC Real Color	32	0 ~ 63	
3	PC Real Tint	32	0 ~ 63	
4	PC Real Red	32	0 ~ 63	
5	PC Real Green	30	0 ~ 63	
6	PC Real Blue	29	0 ~ 63	
7	PC Real Sharpness	0	0 ~ 31	
8	PC Real Gamma	8	0 ~ 15	
9	PC Real N.R.	1	0 ~ 2	
10	PC Real PROGRESSIVE	1	0 or 1	
11	AV Cinema Contrast	32	0 ~ 63	
12	AV Cinema Brightness	32	0 ~ 63	
13	AV Cinema Color	32	0 ~ 63	
14	AV Cinema Tint	32	0 ~ 63	
15	AV Cinema Red	32	0 ~ 63	
16	AV Cinema Green	30	0 ~ 63	
17	AV Cinema Blue	29	0 ~ 63	
18	AV Cinema Sharpness	15	0 ~ 31	
19	AV Cinema Gamma	8	0 ~ 15	
20	AV Cinema N.R.	1	0 ~ 2	
21	AV Cinema PROGRESSIVE	1	0 or 1	
Group: 20 IP_Converter				
0	IMAGE_IN_FUNC_POL	0/0/0/0/0/ 0/0/0/0/0	0 or 1	000-b4 (reg 0) NTSC / PAL / 480p / 575p / 1035i / 1080i / 1080i50 / 720p / 480i / 575i
1	IMAGE_IN_HD_SEL	1/1/1/1/1/ 1/1/1/1/1	0 or 1	000-b3
2	IMAGE_IN_HD_POL	1/1/1/1/1/ 1/1/1/1/1	0 or 1	000-b2
3	IMAGE_IN_VD_POL	1/1/1/1/1/ 1/1/1/1/1	0 or 1	000-b1
4	IMAGE_IN_LPF_SEL	0/0/0/0/0/ 0/0/0/0/0	0 or 1	000-b0
5	IMAGE_OUT_CLK_POL	0/0/0/0/0/ 0/0/0/0/0	0 or 1	001-b5
6	IMAGE_OUT_HD_POL	0/0/0/0/0/ 0/0/0/0/0	0 or 1	001-b4
7	IMAGE_OUT_VD_POL	0/0/0/0/0/ 0/0/0/0/0	0 or 1	001-b3
8	IMAGE_OUT_CS_SEL	0/0/0/0/0/ 0/0/0/0/0	0 or 1	001-b2
9	IMAGE_OUT_DEMUX	1/1/1/1/1/ 1/1/1/1/1	0 or 1	001-b1
10	IMAGE_OUT_THROUGH	0/0/1/1/0/ 0/0/1/0/0	0 or 1	001-b0
11	IMAGE_IN_TOTAL_H	Same as G510 - G517	0 ~ 2047	002 / 003 Same as G510 - G517 Read only
12	IMAGE_IN_START_H	190/ 200/ 184/ 208/ 136/ 137/ 96/ 237/ 190/ 205	0 ~ 2047	004 / 005
13	IMAGE_IN_SIZE_H	9/10/9/9/8/ 8/10/10/9/10	0 ~ 15	006 Read only
14	IMAGE_IN_START_V,	10 / 15 / 32 / 26 / 13/ 10 / 10 / 20 / 10 / 16	0 ~ 1023	007 / 008
15	IMAGE_IN_SIZE_V,	250 / 295 / 490 / 545 / 545 / 545 / 545/ 725 / 250 / 296	0 ~ 1023	009 / 010
16	CLAMP_H,	100 / 130 / 112 / 123 / 56 / 58 / 107 / 115 / 130 / 113 / 123 / 56 / 58 / 107 / 115 / 130	0 ~ 2047	011 / 012 NTSC / PAL / Comp480p / Comp575p / Comp1035i / Comp1080i,1080i50 / Comp720p / Comp480i / Comp575i / RGB480p / RGB575p / RGB1035i / RGB1080i,1080i50 / RGB720p / RGB480i / RGB575i
17	CLAMP_L,	140 / 160 / 142 / 158 / 81 / 83 / 161 / 145 / 160 / 143 / 158 / 81 / 83 / 161 / 145 / 160	0 ~ 2047	013 / 014
18	IMAGE_OUT_DELAY_H,	-	0 ~ 2047 Read only	015 / 016 (reg 2) NTSC / PAL / 480p / 575p / 1035i / 1080i,1080i50 / 720p / 480i / 575i

No.	Adjustment Item	Initial Value	Range	Input source / Description
19	SYNC_OUT_DELAY_H,	-	0 ~ 2047 Read only	017 / 018
20	SYNC_OUT_DELAY_V,	-	0 ~ 2047 Read only	019 / 020
21	IMAGE_OUT_START_H,	0	Set 0	021 / 022
22	IMAGE_OUT_END_H,	2047	Set 2047	023 / 024
23	IMAGE_OUT_START_V,	0/ 0/ 0/ 0/ 0/ 0/ 0/ 0	0 ~ 2047	025 / 026 + F440
24	IMAGE_OUT_END_V,	517 / 618 / 1038 / 1250 / 1119 / 1119 / 1490 / 517 / 618	0 ~ 2047	027 / 028
25	G_Y_IN_OS,	0 / 0	0 ~ 255	029 (reg 3) Not_RGB / RGB
26	B_CB_IN_OS,	128 / 0	0 ~ 255	030
27	R_CR_IN_OS,	128 / 0	0 ~ 255	031
28	G2Y,	256 / 150	0 ~ 1023	032 / 033 (reg 4) Not_RGB / RGB
29	B2Y,	0 / 29	0 ~ 1023	034 / 035
30	R2Y,	0 / 77	0 ~ 1023	036 / 037
31	G2CB,	0 / 939	0 ~ 1023	038 / 039
32	B2CB,	256 / 128	0 ~ 1023	040 / 041
33	R2CB,	0 / 983	0 ~ 1023	042 / 043
34	G2CR,	0 / 917	0 ~ 1023	044 / 045
35	B2CR,	0 / 1003	0 ~ 1023	046 / 047
36	R2CR,	256 / 128	0 ~ 1023	048 / 049
37	HUE_M,	37 / 35	0 ~ 255	050
38	GAIN_M,	0 / 0	0 ~ 127	051
39	DG_M_R,	0 / 0	0 ~ 63	052 (reg 4) Not_RGB / RGB
40	HUE_R,	77 / 73	0 ~ 255	053
41	GAIN_R,	0 / 0	0 ~ 127	054
42	DG_R_Y,	0 / 0	0 ~ 63	055
43	HUE_Y,	121 / 124	0 ~ 255	056
44	GAIN_Y,	0 / 0	0 ~ 127	057
45	DG_Y_G,	0 / 0	0 ~ 63	058
46	HUE_G,	165 / 163	0 ~ 255	059
47	GAIN_G,	0 / 0	0 ~ 127	060
48	DG_G_C,	0 / 0	0 ~ 63	061
49	HUE_C,	205 / 201	0 ~ 255	062
50	GAIN_C,	0 / 0	0 ~ 127	063
51	DG_C_B,	0 / 0	0 ~ 63	064
52	HUE_B,	249 / 252	0 ~ 255	065
53	GAIN_B,	0 / 0	0 ~ 127	066
54	DG_B_M,	0 / 0	0 ~ 63	067
55	DNR_Y_NOISE_TH,	8 / 8	0 ~ 255	068 (reg 5) DNR-OFF / DNR-ON
56	DNR_Y_SENSE,	0 / 6	0 ~ 15	069
57	DNR_Y_MOTION_TH,	0 / 0	0 ~ 255	070
58	DNR_Y_MOTION_SLOPE,	4 / 4	0 ~ 7	071
59	DNR_Y_MOTION_F2_F0,	0 / 0	0 ~ 3	072
60	DNR_Y_MOTION_F4_F2,	3 / 3	0 ~ 3	073
61	DNR_C_NOISE_TH,	8 / 8	0 ~ 255	074
62	DNR_C_SENSE,	0 / 8	0 ~ 255	075
63	DNR_C_MOTION_TH,	0 / 0	0 ~ 255	076
64	DNR_C_MOTION_SLOPE,	4 / 4	0 ~ 7	077
65	DNR_C_MOTION_F2_F0,	0 / 0	0 ~ 3	078
66	DNR_C_MOTION_F4_F2,	3 / 3	0 ~ 3	079
67	IP_DEBUG,	0 / 0 / 0	0 ~ 7	080 (reg 6) IP-ON=NTSC,PAL,1035i,1080i,1080i50 /
68	IP_CTL_Y,	0 / 1 / 1	0 or 1	081-1 IP-ON&OFF=720p,480p,575p /
69	IP_CTL_C,	1 / 1 / 1	0 or 1	081-0 IP-OFF=NTSC,PAL,1035i,1080i,1080i50
70	IP_DIR,	10 / 0 / 0	0 ~ 15	082 (reg 7) IP-ON=NTSC,PAL /
71	IP_VAR_GAI,	8 / 0 / 0	0 ~ 15	083 IP-ON=1035i,1080i,1080i50 / IP-ON&OFF=720p,480p,575p /
72	IP_BPF_CORR,	4 / 0 / 0	0 ~ 255	084 IP-OFF=NTSC,PAL,1035i,1080i,1080i50
73	IP_BPF_GAIN,	32 / 0 / 0	0 ~ 63	085
74	IP_REL_H_GAIN,	63 / 0 / 0	0 ~ 63	086
75	IP_REL_V_GAIN,	63 / 0 / 0	0 ~ 63	087
76	MOTION_LPF_SEL,	7/ 7/ 7/ 7/ 7/ 7/ 7/ 7	0 ~ 7	088 (reg 8) DNR-ON=NTSC,PAL / DNR-OFF=NTSC,PAL / 1035i,1080i,1080i50 / 720p,480p,575p /
77	MOTION_TH_MIN.,	8/ 8/ 8/ 8/ 22/ 22/ 22/ 22	0 ~ 255	089 L2&&DNR-ON =NT,PAL/L2&&DNR-OFF=NT,PAL/L2=1035i,1080i,1080i50/L2=720p,480p,575p
78	MOTION_TH_MAX,	16 / 16 / 16 / 16 / 38 / 38 / 38 / 38	0 ~ 255	090
79	MOTION_TH_DL,	8/ 12/ 8/ 8/ 8/ 12/ 8/ 8	0 ~ 255	091
80	MOTION_WEIGHT_0,	9/ 9/ 9/ 9/ 9/ 9/ 9/ 9	0 ~ 15	092
81	MOTION_WEIGHT_1,	8/ 8/ 8/ 8/ 8/ 8/ 8/ 8	0 ~ 15	093
82	MOTION_WEIGHT_2,	7/ 7/ 7/ 7/ 7/ 7/ 7/ 7	0 ~ 15	094
83	MOTION_WEIGHT_3,	6/ 6/ 6/ 6/ 6/ 6/ 6/ 6	0 ~ 15	095
84	MOTION_WEIGHT_4,	5/ 5/ 5/ 5/ 5/ 5/ 5/ 5	0 ~ 15	096
85	MOTION_WEIGHT_5,	4/ 4/ 4/ 4/ 4/ 4/ 4/ 4	0 ~ 15	097

No.	Adjustment Item	Initial Value	Range	Input source / Description
86	MOTION_WEIGHT_6,	3/ 3/ 3/ 3/ 3/ 3/ 3	0 ~ 15	098
87	MOTION_WEIGHT_7,	2/ 2/ 2/ 2/ 2/ 2/ 2	0 ~ 15	099
88	MOTION_WEIGHT_8,	1/ 1/ 1/ 1/ 1/ 1/ 1	0 ~ 15	100
89	MOTION_SUM_0,	20/ 20/ 0/ 0/ 20/ 20/ 0/ 0	0 ~ 1023	101
90	MOTION_SUM_1,	32/ 32/ 9/ 9/ 32/ 32/ 9/ 9	0 ~ 1023	103
91	MOTION_SUM_2,	86/ 86/ 0/ 0/ 86/ 86/ 0/ 0	0 ~ 1023	105
92	MOTION_SUM_3,	110 / 110 / 63 / 63 / 110 / 110 / 63 / 63	0 ~ 1023	107
93	PEAK_V_LPF_SEL,	1	0 or 1	109 (reg 9) fix
94	PEAK_V_CORR,	0	0 ~ 255	110
95	PEAK_V_GAIN,	-	0 ~ 63	111 Read only
96	PEAK_V_GAIN_TH,	0	0 ~ 255	112
97	PEAK_V_GAIN_SLOPE,	0	0 ~ 7	113
98	PEAK_V_MAX,	255	0 ~ 255	114
99	TI_Y_TH_MIN.,	1	0 ~ 255	115
100	TI_Y_TH_MAX,	255	0 ~ 255	116
101	TI_Y_CORR,	1	0 ~ 255	117
102	TI_Y_GAIN,	1	0 ~ 63	118
103	TI_Y_GAIN_TH,	0	0 ~ 255	119
104	TI_Y_GAIN_SLOPE,	0	0 ~ 7	120
105	TI_Y_GAIN_SEL,	1	0 ~ 7	121
106	TI_C_TH_MIN.,	0	0 ~ 255	122
107	TI_C_TH_MAX,	0	0 ~ 255	123
108	TI_C_CORR,	0	0 ~ 255	124
109	TI_C_GAIN,	0	0 ~ 63	125 (reg 9) fix
110	TI_C_GAIN_TH,	0	0 ~ 7	126
111	TI_C_GAIN_SLOPE,	0	0 ~ 7	127
112	TI_C_GAIN_SEL,	0	0 ~ 7	128
113	PEAK_H_BPF_SEL,	0 / 1	0 ~ 3	129 (reg A) NTSC,PAL,480p,575p / 720p,1035i,1080i,1080i50
114	PEAK_H_CORR,	3 / 0	0 ~ 255	130
115	PEAK_H_GAIN,	- / -	0 ~ 63	131
116	PEAK_H_GAIN_TH,	0 / 0	0 ~ 255	132
117	PEAK_H_GAIN_SLOPE,	2 / 2	0 ~ 7	133
118	PEAK_H_GAIN_SEL,	1 / 1	0 ~ 3	134
119	PEAK_H_MAX,	255 / 255	0 ~ 255	135
120	Y2G,	- / -	0 ~ 1023	136 / 137 (reg B) NTSC,PAL,480p,575p / 1035i,1080i,1080i50,720p
121	CB2G,	- / -	0 ~ 1023	138 / 139
122	CR2G,	- / -	0 ~ 1023	140 / 141
123	Y2B,	- / -	0 ~ 1023	142 / 143
124	CB2B,	- / -	0 ~ 1023	144 / 145
125	CR2B,	- / -	0 ~ 1023	146 / 147
126	Y2R,	- / -	0 ~ 1023	148 / 149
127	CB2R,	- / -	0 ~ 1023	150 / 151
128	CR2R,	- / -	0 ~ 1023	152 / 153
129	G_Y_OUT_OS,	0	0 ~ 255	154 (reg C) fix
130	G_Y_OUT_MIN.,	0	0 ~ 255	155
131	G_Y_OUT_DC,	0	0 ~ 255	156
132	G_Y_OUT_MAX,	255	0 ~ 255	157
133	B_CB_OUT_OS,	0	0 ~ 255	158
134	B_CB_OUT_MIN.,	0	0 ~ 255	159
135	B_CB_OUT_DC,	0	0 ~ 255	160
136	B_CB_OUT_MAX,	255	0 ~ 255	161
137	R_CR_OUT_OS,	0	0 ~ 255	162
138	R_CR_OUT_MIN.,	0	0 ~ 255	163
139	R_CR_OUT_DC,	0	0 ~ 255	164
140	R_CR_OUT_MAX,	255	0 ~ 255	165
141	CINEMA_START_H,	0 / 0 / 0	0 ~ 255	166 (reg D) IP-ON=NTSC / IP-ON=except NT / IP-OFF
142	CINEMA_SIZE_H,	160 / 0 / 0	0 ~ 255	167
143	CINEMA_START_V,	1 / 0 / 0	0 ~ 255	168
144	CINEMA_SIZE_V,	60 / 0 / 0	0 ~ 255	169
145	CINEMA_MOTION_TH,	16 / 0 / 0	0 ~ 255	170
146	CINEMA_DET_TH,	384 / 0 / 0	0 ~ 65535	171 / 172
147	CINEMA_DET_FIELD,	7 / 0 / 0	0 ~ 7	173
148	CINEMA_CTL_SWAP,	20 / 0 / 0	0 ~ 31	174
149	CINEMA_CTL_Y,	0 / 1 / 1	0 or 1	175-1
150	CINEMA_CTL_C,	1 / 1 / 1	0 or 1	175-0
151	EXT_CINEMA_DET,	0 / 0 / 0	0 or 1	176-2
152	EXT_CINEMA_MODE,	0 / 0 / 0	0 or 1	176-1
153	EXT_CINEMA_SWAP,	0 / 0 / 0	0 or 1	176-0
154	STINT	0 / 0 / 0	0 ~ 31	177 (reg E) without RGB = NTSC,PAL,480p,575p / without RGB = 720p,1035i,1080i,1080i50 / RGB
155	SCOL	140 / 140 / 180	0 ~ 255	178
156	CB2B_STD	454 / 454 / 454	0 ~ 1023	179 / 180

No.	Adjustment Item	Initial Value	Range	Input source / Description
157	CR2B_STD	0 / 0 / 0	0 ~ 1023	181 / 182
158	CB2R_STD	0 / 0 / 0	0 ~ 1023	183 / 184
159	CR2R_STD	359 / 359 / 359	0 ~ 1023	185 / 186
160	CB2G_STD	1015 / 105 / 1015	0 ~ 1023	187 / 188
161	CR2G_STD	842 / 842 / 842	0 ~ 1023	189 / 190
162	S_SHP	8 / 10 / 0	0 ~ 63	191
Group: 21 IP (MB40C348)				
0	V_AMP	0	0 or 1	adr0-2
1	DSEL	1	0 or 1	adr0-1
2	CE	0	0 or 1	adr0-0
3	COUNTER_W	64	0 ~ 4095	adr1,adr2(3-0)
4	ADC_OUT	0	0 or 1	adr3-7
5	HSYNC_POL	1	0 or 1	adr3-6
6	CLK_DELAY	0	0 ~ 63	adr3(5-0)
7	DSYNC_DELAY	1	0 ~ 3	adr4(7-6)
8	ADCLK_B	1	0 or 1	adr4-5
9	ADCLK_A	1	0 or 1	adr4-4
10	DSYNC_B	1	0 or 1	adr4-3
11	DSYNC	1	0 or 1	adr4-2
12	CLK_B	1	0 or 1	adr4-1
13	CLK	1	0 or 1	adr4-0
14	DIVIDER	0	0 ~ 3	adr5(7-6)
15	VCO_CHG	0	0 or 1	adr5-5
16	CURRENT	0	0 or 3	adr5(4-3)
17	counter	1	0 or 1	adr5-2
18	out_clk	0	0 or 1	adr5-1
19	clk_chb	1	0 or 1	adr5-0
Group: 22 ICS1523				
0	ICS_R0_EnDLS	0/ 0/ 0/ 0/ 0/ 0/ 0	0 ~ 1	R0
1	ICS_R0_EnPLS	1/ 1/ 1/ 1/ 1/ 1/ 1	0 ~ 1	NTSC & 480i / PAL & SECAM & 525i / 1035i / 1080i60 / 1080i50 / 720p / 480p / 575p
2	ICS_R0_Func_Sel	0/ 0/ 0/ 0/ 0/ 0/ 0	0 ~ 1	
3	ICS_R0_Fbk_Sel	0/ 0/ 0/ 0/ 0/ 0/ 0	0 ~ 1	
4	ICS_R0_Fbk_Pol	0/ 0/ 0/ 0/ 0/ 0/ 0	0 ~ 1	
5	ICS_R0_Ref_Pol	1/ 1/ 1/ 1/ 1/ 1/ 1	0 ~ 1	
6	ICS_R0_PD_Pol	1/ 1/ 1/ 1/ 1/ 1/ 1	0 ~ 1	
7	ICS_R0_Pden	0/ 0/ 0/ 0/ 0/ 0/ 0	0 ~ 1	
8	ICS_R1_PSD	2/ 2/ 0/ 0 0/ 0/ 0/ 0	0 ~ 3	R1 (Left Data : Progressive = ON , Right Data : Progressive = OFF)
9	ICS_R1_PFD	6/ 6/ 6/ 6 6/ 5/ 5/ 5	0 ~ 7	NTSC & 480i / PAL & SECAM & 525i / 1035i / 1080i60 /1080i50 / 720p / 480p / 575p
10	ICS_R3_FBD	2600/ 2654/ 2458/ 2458 2866/ 1343/ 1273/ 1276	0 ~ 8191	R3_R2 NTSC & 480i / PAL & SECAM & 525i / 1035i / 1080i60 / 1080i50 / 720p / 480p / 575p
11	ICS_R4_Fil_Sel	0	0 ~ 1	R4
12	ICS_R4_DPA_OS	0	0 ~ 63	NTSC & 480i / PAL & SECAM & 525i / 1035i & 1080i60 & 1080i50 / 720p & 480p & 575p
13	ICS_R5_Mask_Rev	0	0 ~ 63	R5
14	ICS_R5_DPA_Res	0	0 ~ 3	NTSC & 480i / PAL & SECAM & 525i / 1035i & 1080i60 & 1080i50 / 720p & 480p & 575p
15	ICS_R6_Out_Scl	0	0 ~ 3	R6
16	ICS_R6_Ck2_Inv	0	0 ~ 1	NTSC & 480i / PAL & SECAM & 525i / 1035i & 1080i60 & 1080i50 / 720p & 480p & 575p
17	ICS_R6_OE_F	1	0 ~ 1	
18	ICS_R6_OE_T2	0	0 ~ 1	
19	ICS_R6_OE_P2	0	0 ~ 1	
20	ICS_R6_OE_Tck	0	0 ~ 1	
21	ICS_R6_OE_Pck	1	0 ~ 1	
22	ICS_R7_In_Sel	0	0 ~ 1	R7
23	ICS_R7_Osc_Div	0	0 ~ 127	NTSC & 480i / PAL & SECAM & 525i / 1035i & 1080i60 & 1080i50 / 720p & 480p & 575p
24	ICS_R8_PLL	0	0 ~ 15	R8
25	ICS_R8_DPA	10	0 ~ 15	NTSC & 480i / PAL & SECAM & 525i / 1035i & 1080i60 & 1080i50 / 720p & 480p & 575p
Group: 30 SAM3				
0	SAM3_AREA_DISP_ON_ud	0	0 ~ 1	Aperture compensation Area Display 0: OFF 1: ON
1	SAM3_SA_ON_ud	0	0 ~ 1	Y signal converter switch 0: OFF 1: ON
2	SAM3_MONI_SEL_ON_ud	0	0 ~ 1	CPU data monitor switch 0: OFF 1: ON
3	SAM3_SHP_EN_SET_ud	194	0 ~ 4095	Set aperture compensation effective period
4	SAM3_SHP_EN_RST_ud	1538	0 ~ 4095	Reset aperture compensation effective period
5	SAM3_Area_ON_Pic_LEVEL	31	0 ~ 255	
6	SAM3_Area_ON_Pic_MON	0	0 ~ 1	
7	SAM3_ColoM_Point_MON	0	0 ~ 1	
8	SAM3_TURBO_OFF_GAIN	0	0 ~ 255	
9	SAM3_TURBO_ON_GAIN	25	0 ~ 255	
Group: 31 SAM3 Enhanser				
0	SAM3_ENH_PC_ON/OFF	0	0 ~ 1	Enhanser for PC 0: Disable 1: Enable
1	SAM3_ENH_AV_ON/OFF	0	0 ~ 1	Enhanser for AV 0: Disable 1: Enable
2	SAM3_ENH_Change_L_ud	17	0 ~ 100	Enhanser
3	SAM3_ENH_CORE_L_ud	63	0 ~ 127	
4	SAM3_ENH_DNR_Y_ud	64	0 ~ 1023	

No.	Adjustment Item	Initial Value	Range	Input source / Description
5	SAM3_AB_ON_ud	3	0 ~ 3	
6	SAM3_EGE_ud	0	0 ~ 3	
7	SAM3_Enh_Hset_PC_X_ud	18	0 ~ 255	
8	SAM3_Enh_Hrst_PC_X_ud	138	0 ~ 255	
9	SAM3_Enh_Vset_PC_X_ud	0	0 ~ 255	
10	SAM3_Enh_Vrst_PC_X_ud	97	0 ~ 255	
11	SAM3_Enh_Hset_PC_F_ud	18	0 ~ 255	
12	SAM3_Enh_Hrst_PC_F_ud	138	0 ~ 255	
13	SAM3_Enh_Vset_PC_F_ud	12	0 ~ 255	
14	SAM3_Enh_Vrst_PC_F_ud	85	0 ~ 255	
15	SAM3_Enh_Hset_PC_V_ud	68	0 ~ 255	
16	SAM3_Enh_Hrst_PC_V_ud	115	0 ~ 255	
17	SAM3_Enh_Vset_PC_V_ud	18	0 ~ 255	
18	SAM3_Enh_Vrst_PC_V_ud	79	0 ~ 255	
19	SAM3_Enh_Hset_AV_F_ud	18	0 ~ 255	
20	SAM3_Enh_Hrst_AV_F_ud	138	0 ~ 255	
21	SAM3_Enh_Vset_AV_F_ud	12	0 ~ 255	
22	SAM3_Enh_Vrst_AV_F_ud	85	0 ~ 255	
23	SAM3_Enh_Hset_AV_Z_ud	-	0 ~ 255	
24	SAM3_Enh_Hrst_AV_Z_ud	-	0 ~ 255	
25	SAM3_Enh_Vset_AV_Z_ud	-	0 ~ 255	
26	SAM3_Enh_Vrst_AV_Z_ud	-	0 ~ 255	
27	SAM3_Enh_Hset_AV_N_ud	18	0 ~ 255	
28	SAM3_Enh_Hrst_AV_N_ud	138	0 ~ 255	
29	SAM3_Enh_Vset_AV_N_ud	0	0 ~ 255	
30	SAM3_Enh_Vrst_AV_N_ud	97	0 ~ 255	
31	SAM3_Enh_PC_LEVEL0	0	0 ~ 31	
32	SAM3_Enh_PC_LEVEL1	21	0 ~ 31	
33	SAM3_Enh_PC_LEVEL2	21	0 ~ 31	
34	SAM3_Enh_PC_AREA_HS	0	0 ~ 3	
35	SAM3_Enh_PC_AREA_VS	3	0 ~ 7	
36	SAM3_Enh_PC_AREA_HE	3	0 ~ 3	
37	SAM3_Enh_PC_AREA_VE	5	0 ~ 7	
38	SAM3_Enh_PC_AREA1	50	0 ~ 655	
39	SAM3_Enh_PC_AREA2	50	0 ~ 655	
40	SAM3_Enh_AV_LEVEL0	23	0 ~ 31	
41	SAM3_Enh_AV_LEVEL1	23	0 ~ 31	
42	SAM3_Enh_AV_LEVEL2	22	0 ~ 31	
43	SAM3_Enh_AV_AREA_HS	1	0 ~ 3	
44	SAM3_Enh_AV_AREA_VS	0	0 ~ 7	
45	SAM3_Enh_AV_AREA_HE	2	0 ~ 3	
46	SAM3_Enh_AV_AREA_VE	7	0 ~ 7	
47	SAM3_Enh_AV_AREA1	0	0 ~ 655	
Group: 32 SAM3 Auto Picture				
0	SAM3_Cont_ON/OFF	1	0 ~ 2	Enable Flag 0 : Disable 1 : Enable(recovery) 2 : Enable(re-judgement)
1	SAM3_Cont_L1_MD1_L	3	0 ~ 31	
2	SAM3_Cont_L1_MD2_L	3	0 ~ 31	
3	SAM3_Cont_L1_MD3_L	3	0 ~ 31	
4	SAM3_Cont_L2_MD1_L	5	0 ~ 31	
5	SAM3_Cont_L2_MD2_L	5	0 ~ 31	
6	SAM3_Cont_L2_MD3_L	5	0 ~ 31	
7	SAM3_Cont_OFFSET	10	0 ~ 511	
8	SAM3_Cont_APL_LEVEL	400	0 ~ 511	
9	SAM3_Cont_APL_M_LEVEL	400	0 ~ 511	
10	SAM3_Cont_APL_SPEED	4	1 ~ 64	
11	SAM3_Cont_Chg_LEVEL1	15	0 ~ 127	
12	SAM3_Cont_Chg_LEVEL2	30	0 ~ 127	
13	SAM3_Cont_Hst_PC_X_ud	90	0 ~ 4095	
14	SAM3_Cont_Vst_PC_X_ud	2	0 ~ 4095	
15	SAM3_Cont_Hblk_PC_X_ud	31	0 ~ 63	
16	SAM3_Cont_Vblk_PC_X_ud	23	0 ~ 63	
17	SAM3_Cont_Hst_PC_F_ud	90	0 ~ 4095	
18	SAM3_Cont_Vst_PC_F_ud	97	0 ~ 4095	
19	SAM3_Cont_Hblk_PC_F_ud	31	0 ~ 63	
20	SAM3_Cont_Vblk_PC_F_ud	17	0 ~ 63	
21	SAM3_Cont_Hst_PC_V_ud	283	0 ~ 4095	
22	SAM3_Cont_Vst_PC_V_ud	146	0 ~ 4095	
23	SAM3_Cont_Hblk_PC_V_ud	19	0 ~ 63	
24	SAM3_Cont_Vblk_PC_V_ud	14	0 ~ 63	
25	SAM3_Cont_Hst_AV_F_ud	90	0 ~ 4095	
26	SAM3_Cont_Vst_AV_F_ud	98	0 ~ 4095	
27	SAM3_Cont_Hblk_AV_F_ud	31	0 ~ 63	

No.	Adjustment Item	Initial Value	Range	Input source / Description
28	SAM3_Cont_Vblk_AV_F_ud	17	0 ~ 63	
29	SAM3_Cont_Vst_AV/F/V_ud	178	0 ~ 4095	
30	SAM3_Cont_Vblk/AV/F/V_ud	12	0 ~ 63	
31	SAM3_Cont_Vst_AV/F/V_ud	210	0 ~ 4095	
32	SAM3_Cont_Vblk/AV/F/V_ud	10	0 ~ 63	
33	SAM3_Cont_Hst_AV_Z_ud	-	0 ~ 4095	
34	SAM3_Cont_Vst_AV_Z_ud	-	0 ~ 4095	
35	SAM3_Cont_Hblk_AV_Z_ud	-	0 ~ 63	
36	SAM3_Cont_Vblk_AV_Z_ud	-	0 ~ 63	
37	SAM3_Cont_Vst_AV/Z/C_ud	-	0 ~ 4095	
38	SAM3_Cont_Vblk/AV/Z/C_ud	-	0 ~ 63	
39	SAM3_Cont_Hst_AV_N_ud	90	0 ~ 4095	
40	SAM3_Cont_Vst_AV_N_ud	2	0 ~ 4095	
41	SAM3_Cont_Hblk_AV_N_ud	31	0 ~ 63	
42	SAM3_Cont_Vblk_AV_N_ud	23	0 ~ 63	
43	SAM3_Cont_Vst/AV/N/V_ud	98	0 ~ 4095	
44	SAM3_Cont_Vblk/AV/N/V_ud	17	0 ~ 63	
45	SAM3_Cont_Vst/AV/N/C_ud	162	0 ~ 4095	
46	SAM3_Cont_Vblk/AV/N/C_ud	13	0 ~ 63	
47	SAM3_Level-up_Mode_EQ	2	0 ~ 16	
Group: 33 SAM3 ColorM (Color Management)				
0	SAM3_COLM_Yrange_ud	8	0 ~ 32	
1	SAM3_COLM_UVphase_ud	6	0 ~ 32	
2	SAM3_COLM_UVcomp_ud	95	50 ~ 100	
3	SAM3_ColM_MinSlope_ud	3	0 ~ 10	
4	SAM3_ColM_MaxSlope_ud	18	10 ~ 30	
5	SAM3_ColM_ConvPT_ud	3	1 ~ 5	
6	SAM3_ColM_BASE_X_ud	24	0 ~ 1024	
7	SAM3_ColM_BASE_Y_ud	1	0 ~ 1024	
8	SAM3_ColM_Get_Y_ud	9	1, 3, 5, 9	
9	SAM3_ColM_Nsh_Yrange	32	0 ~ 64	
10	SAM3_ColM_Fsh_UVnorm	3	0 ~ 10	
11	SAM3_ColM_Fsh_UVphase	100	0 ~ 900	
12	SAM3_ColM_Fcut_UVnorm	50	0 ~ 640	
13	SAM3_ColM_Ncut_MinY	0	0 ~ 127	
14	SAM3_ColM_Ncut_MaxY	255	128 ~ 255	
15	SAM3_ColM_Sci_Col_ud	0	0 ~ 4	
16	SAM3_ColM_View_Yinc_ud	76	0 ~ 128	
17	SAM3_ColM_View_Rinc_ud	4	0 ~ 8	
18	SAM3_ColM_View_Ginc_ud	4	0 ~ 8	
19	SAM3_ColM_View_Binc_ud	4	0 ~ 8	
20	SAM3_ColM_General_ud	98	0 ~ 255	
21	SAM3_ColM_PC_XS_N_ud	0	0 ~ 2048	
22	SAM3_ColM_PC_XE_N_ud	1024	0 ~ 2048	
23	SAM3_ColM_PC_YS_N_ud	0	0 ~ 2048	
24	SAM3_ColM_PC_YE_N_ud	768	0 ~ 2048	
25	SAM3_ColM_PC_XS_N_ud	0	0 ~ 2048	
26	SAM3_ColM_PC_XE_N_ud	1024	0 ~ 2048	
27	SAM3_ColM_PC_YS_N_ud	0	0 ~ 2048	
28	SAM3_ColM_PC_YE_N_ud	768	0 ~ 2048	
29	SAM3_ColM_AV_XS_N_ud	0	0 ~ 2048	
30	SAM3_ColM_AV_XE_N_ud	1024	0 ~ 2048	
31	SAM3_ColM_AV_YS_N_ud	0	0 ~ 2048	
32	SAM3_ColM_AV_YE_N_ud	768	0 ~ 2048	
33	SAM3_ColM_AV_XS_N_ud	0	0 ~ 2048	
34	SAM3_ColM_AV_XE_N_ud	1024	0 ~ 2048	
35	SAM3_ColM_AV_YS_N_ud	0	0 ~ 2048	
36	SAM3_ColM_AV_YE_N_ud	768	0 ~ 2048	
Group: 40 DIMMER				
0	DIMMER_AREA_HS	27	0 ~ 2047	
1	DIMMER_AREA_HR	1051	0 ~ 2047	
2	DIMMER_AREA_VS	4	0 ~ 2047	
3	DIMMER_AREA_VR	772	0 ~ 2047	
4	DIMMER_CTRL_LEVEL1	75	0 ~ 32767	
5	DIMMER_CTRL_LEVEL2	150	0 ~ 32767	
6	DIMMER_CTRL_LEVEL3	225	0 ~ 32767	
7	DIMMER_CTRL_LEVEL4	300	0 ~ 32767	
8	DIMMER_CTRL_LEVEL5	375	0 ~ 32767	
9	DIMMER_CTRL_LEVEL6	450	0 ~ 32767	
10	DIMMER_CTRL_LEVEL7	525	0 ~ 32767	
11	DIMMER_CTRL_LEVEL8	600	0 ~ 32767	
12	DIMMER_CTRL_LEVEL9	675	0 ~ 32767	

No.	Adjustment Item	Initial Value	Range	Input source / Description
13	DIMMER_CTRL_LEVEL10	750	0 ~ 32767	
14	DIMMER_CTRL_LEVEL11	825	0 ~ 32767	
15	DIMMER_CTRL_LEVEL12	900	0 ~ 32767	
16	DIMMER_CTRL_LEVEL13	975	0 ~ 32767	
17	DIMMER_CTRL_LEVEL14	1050	0 ~ 32767	
18	DIMMER_CTRL_LEVEL15	1125	0 ~ 32767	
19	DIMMER_AVERAGE_POINT	4	1 ~ 16	
20	DIMMER_AVERAGE_DATA	-	0 ~	Read only
21	DIMMER_COLOR_DATA	-	0 ~	Read only
22	DIMMER_LEVEL	-	0 ~ 15	Read only
Group: 100 GAMMA				
0	Standard GAMMA 0	0 / 0	0 ~ 1023	PC,DVI standard / AV Standard
1	Standard GAMMA 1	220 / 200	0 ~ 1023	Read only
2	Standard GAMMA 2	300 / 300	0 ~ 1023	
3	Standard GAMMA 3	398 / 418	0 ~ 1023	
4	Standard GAMMA 4	483 / 484	0 ~ 1023	
5	Standard GAMMA 5	549 / 532	0 ~ 1023	
6	Standard GAMMA 6	619 / 600	0 ~ 1023	
7	Standard GAMMA 7	666 / 653	0 ~ 1023	
8	Standard GAMMA 8	705 / 692	0 ~ 1023	
9	Standard GAMMA 9	732 / 721	0 ~ 1023	
10	Standard GAMMA 10	758 / 749	0 ~ 1023	
11	Standard GAMMA 11	788 / 777	0 ~ 1023	
12	Standard GAMMA 12	832 / 813	0 ~ 1023	
13	Standard GAMMA 13	863 / 840	0 ~ 1023	
14	Standard GAMMA 14	970 / 880	0 ~ 1023	
15	Standard GAMMA 15	1023 / 925	0 ~ 1023	
16	Real/Cinema GAMMA 0	0 / 0	-512 ~ 511	PC,DVI Real / AV Cinema
17	Real/Cinema GAMMA 1	80 / 70	-512 ~ 511	Read only (Difference from Standard mode)
18	Real/Cinema GAMMA 2	80 / 65	-512 ~ 511	
19	Real/Cinema GAMMA 3	58 / 12	-512 ~ 511	
20	Real/Cinema GAMMA 4	20 / 2	-512 ~ 511	
21	Real/Cinema GAMMA 5	9 / 6	-512 ~ 511	
22	Real/Cinema GAMMA 6	4 / -1	-512 ~ 511	
23	Real/Cinema GAMMA 7	0 / -9	-512 ~ 511	
24	Real/Cinema GAMMA 8	-5 / -8	-512 ~ 511	
25	Real/Cinema GAMMA 9	-3 / -6	-512 ~ 511	
26	Real/Cinema GAMMA 10	2 / -1	-512 ~ 511	
27	Real/Cinema GAMMA 11	3 / -1	-512 ~ 511	
28	Real/Cinema GAMMA 12	-3 / 0	-512 ~ 511	
29	Real/Cinema GAMMA 13	-1 / 0	-512 ~ 511	
30	Real/Cinema GAMMA 14	-70 / -12	-512 ~ 511	
31	Real/Cinema GAMMA 15	-73 / -25	-512 ~ 511	
Group: 101 COLSHD (Color Shading Correction)				
0	Level R-MIN	60	0 ~ 1023	
1	Level R-MID2	442	0 ~ 1023	
2	Level R-MID1	570	0 ~ 1023	
3	Level R-MAX	696	0 ~ 1023	
4	Level G-MIN	60	0 ~ 1023	
5	Level G-MID2	442	0 ~ 1023	
6	Level G-MID1	570	0 ~ 1023	
7	Level G-MAX	696	0 ~ 1023	
8	Level B-MIN	60	0 ~ 1023	
9	Level B-MID2	442	0 ~ 1023	
10	Level B-MID1	570	0 ~ 1023	
11	Level B-MAX	696	0 ~ 1023	
Group: 500 ADC				
0	ADC G-OFFSET	65	0 ~ 255	※ Pedestal adjustment [G]
1	ADC B-OFFSET	65	0 ~ 255	※ Pedestal adjustment [B]
2	ADC R-OFFSET	65	0 ~ 255	※ Pedestal adjustment [R]
3	ADC G-GAIN	61	0 ~ 255	
4	ADC B-GAIN	63	0 ~ 255	
5	ADC R-GAIN	65	0 ~ 255	
6	ADC BandWidth PC	3	0 ~ 3	
7	ADC BandWidth AV	3	0 ~ 3	
Group: 502 Keystone Aspect				
0	ASPECT_SCALE	64	0 ~ 255	
1	ASPECT_POSITION	64	0 ~ 255	
2	OSD V Position	0	-	
3	OSD H Position	0	-	
4	V Scaler	50	-	
5	V Scaler Position	2500	0 ~ 5000	

No.	Adjustment Item	Initial Value	Range	Input source / Description
6	H Scaler	50	0 ~ 255	
7	H Scaler Position	2500	0 ~ 5000	
8	Aspect Customize Mode	0	0 ~ 1	0: Normal, 1: Custom
Group: 510 NTSC Gakaku				
0	NTSC TOTAL DOTS	1316	0 ~ 2048	NT
1	NTSC DISP DOTS	1024	0 ~ 2048	
2	NTSC H BACK PORCH	573	0 ~ 2048	
3	NTSC V BACK PORCH	41	0 ~ 2048	
4	NTSC DISP LINE	457	0 ~ 2048	
5	NTSC CLAMP	0	0 ~ 2048	
Group: 511 PAL Gakaku				
0	PAL TOTAL DOTS	1352	0 ~ 2048	PAL
1	PAL DISP DOTS	1024	0 ~ 2048	PAL
2	PAL H BACK PORCH	665	0 ~ 2048	
3	PAL V BACK PORCH	57	0 ~ 2048	
4	PAL DISP LINE	535	0 ~ 2048	
5	PAL CLAMP	0	0 ~ 2048	
Group: 512 HDTV 1080i-60 Gakaku				
0	TOTAL DOTS	1206	0 ~ 2048	1080i60
1	DISP DOTS	1024	0 ~ 2048	
2	H BACK PORCH	391	0 ~ 2048	
3	V BACK PORCH	50	0 ~ 2048	
4	DISP LINE	1053	0 ~ 2048	
5	CLAMP	7	0 ~ 2048	
Group: 513 HDTV 1080i-50 Gakaku				
0	TOTAL DOTS	1444	0 ~ 2048	1080i50
1	DISP DOTS	1024	0 ~ 2048	
2	H BACK PORCH	386	0 ~ 2048	
3	V BACK PORCH	51	0 ~ 2048	
4	DISP LINE	1050	0 ~ 2048	
5	CLAMP	7	0 ~ 2048	
Group: 514 HDTV 1035i Gakaku				
0	TOTAL DOTS	1206	0 ~ 2048	1035i
1	DISP DOTS	1024	0 ~ 2048	
2	H BACK PORCH	415	0 ~ 2048	
3	V BACK PORCH	87	0 ~ 2048	
4	DISP LINE	1012	0 ~ 2048	
5	CLAMP	7	0 ~ 2048	
Group: 515 HDTV 720p Gakaku				
0	TOTAL DOTS	1352	0 ~ 2048	720p
1	DISP DOTS	1024	0 ~ 2048	
2	H BACK PORCH	871	0 ~ 2048	
3	V BACK PORCH	54	0 ~ 2048	
4	DISP LINE	702	0 ~ 2048	
5	CLAMP	8	0 ~ 2048	
Group: 516 HDTV 575p Gakaku				
0	TOTAL DOTS	1320	0 ~ 2048	575p
1	DISP DOTS	1024	0 ~ 2048	
2	H BACK PORCH	858	0 ~ 2048	
3	V BACK PORCH	101	0 ~ 2048	
4	DISP LINE	547	0 ~ 2048	
5	CLAMP	8	0 ~ 2048	
Group: 517 HDTV 480p Gakaku				
0	TOTAL DOTS	1283	0 ~ 2048	480p
1	DISP DOTS	1024	0 ~ 2048	
2	H BACK PORCH	822	0 ~ 2048	
3	V BACK PORCH	82	0 ~ 2048	
4	DISP LINE	460	0 ~ 2048	
5	CLAMP	7	0 ~ 2048	
Group: 518 RGB NTSC Gakaku				
0	TOTAL DOTS	1314	0 ~ 2048	RGB NTSC
1	DISP DOTS	1024	0 ~ 2048	
2	H BACK PORCH	555	0 ~ 2048	
3	V BACK PORCH	40	0 ~ 2048	
4	DISP LINE	459	0 ~ 2048	
5	CLAMP	4	0 ~ 2048	
Group: 519 RGB PAL Gakaku				
0	TOTAL DOTS	1352	0 ~ 2048	RGB PAL
1	DISP DOTS	1024	0 ~ 2048	
2	H BACK PORCH	651	0 ~ 2048	
3	V BACK PORCH	57	0 ~ 2048	
4	DISP LINE	535	0 ~ 2048	

No.	Adjustment Item	Initial Value	Range	Input source / Description
5	CLAMP	4	0 ~ 2048	
Group: 520 RGB 1080i-60 Gakaku				
0	TOTAL DOTS	1206	0 ~ 2048	RGB 1080i60
1	DISP DOTS	1024	0 ~ 2048	
2	H BACK PORCTH	391	0 ~ 2048	
3	V BACK PORCTH	50	0 ~ 2048	
4	DISP LINE	1053	0 ~ 2048	
5	CLAMP	7	0 ~ 2048	
Group: 521 RGB 1080i-50 Gakaku				
0	TOTAL DOTS	1444	0 ~ 2048	RGB 1080i50
1	DISP DOTS	1024	0 ~ 2048	
2	H BACK PORCTH	386	0 ~ 2048	
3	V BACK PORCTH	51	0 ~ 2048	
4	DISP LINE	1050	0 ~ 2048	
5	CLAMP	7	0 ~ 2048	
Group: 522 RGB 1035i Gakaku				
0	TOTAL DOTS	1206	0 ~ 2048	RGB 1035i
1	DISP DOTS	1024	0 ~ 2048	
2	H BACK PORCTH	415	0 ~ 2048	
3	V BACK PORCTH	87	0 ~ 2048	
4	DISP LINE	1013	0 ~ 2048	
5	CLAMP	7	0 ~ 2048	
Group: 523 RGB 720p Gakaku				
0	TOTAL DOTS	1352	0 ~ 2048	RGB 720p
1	DISP DOTS	1024	0 ~ 2048	
2	H BACK PORCTH	871	0 ~ 2048	
3	V BACK PORCTH	56	0 ~ 2048	
4	DISP LINE	702	0 ~ 2048	
5	CLAMP	8	0 ~ 2048	
Group: 524 RGB 575p Gakaku				
0	TOTAL DOTS	1320	0 ~ 2048	RGB 575p
1	DISP DOTS	1024	0 ~ 2048	
2	H BACK PORCTH	856	0 ~ 2048	
3	V BACK PORCTH	100	0 ~ 2048	
4	DISP LINE	547	0 ~ 2048	
5	CLAMP	8	0 ~ 2048	
Group: 525 RGB 480p Gakaku				
0	TOTAL DOTS	1283	0 ~ 2048	RGB 480p
1	DISP DOTS	1024	0 ~ 2048	
2	H BACK PORCTH	822	0 ~ 2048	
3	V BACK PORCTH	83	0 ~ 2048	
4	DISP LINE	462	0 ~ 2048	
5	CLAMP	7	0 ~ 2048	
Group: 526 SCART 575i Gakaku				
0	TOTAL DOTS	1352	0 ~ 2048	SCART 575i
1	DISP DOTS	1024	0 ~ 2048	
2	H BACK PORCTH	661	0 ~ 2048	
3	V BACK PORCTH	57	0 ~ 2048	
4	DISP LINE	535	0 ~ 2048	
5	CLAMP	0	0 ~ 2048	
Group: 527 SCART 480i Gakaku				
0	TOTAL DOTS	1314	0 ~ 2048	SCART 480i
1	DISP DOTS	1024	0 ~ 2048	
2	H BACK PORCTH	564	0 ~ 2048	
3	V BACK PORCTH	39	0 ~ 2048	
4	DISP LINE	459	0 ~ 2048	
5	CLAMP	0	0 ~ 2048	
Group: 550 Gakaku Option				
0	480i H Offset	243	0 ~ 255	Horizontal position offset of Component signal
1	575i H Offset	247	0 ~ 255	
2	HDCP Over Scan	0	0 ~ 3	HDCP 0 : No over scan 1 : 103% 2 : 106% 3 : 109%

* Following information differs from the previous chassis No. MR3-XP5500, others are the same;
  - The main board is changed.

Test Points and Locations

● MAIN BOARD

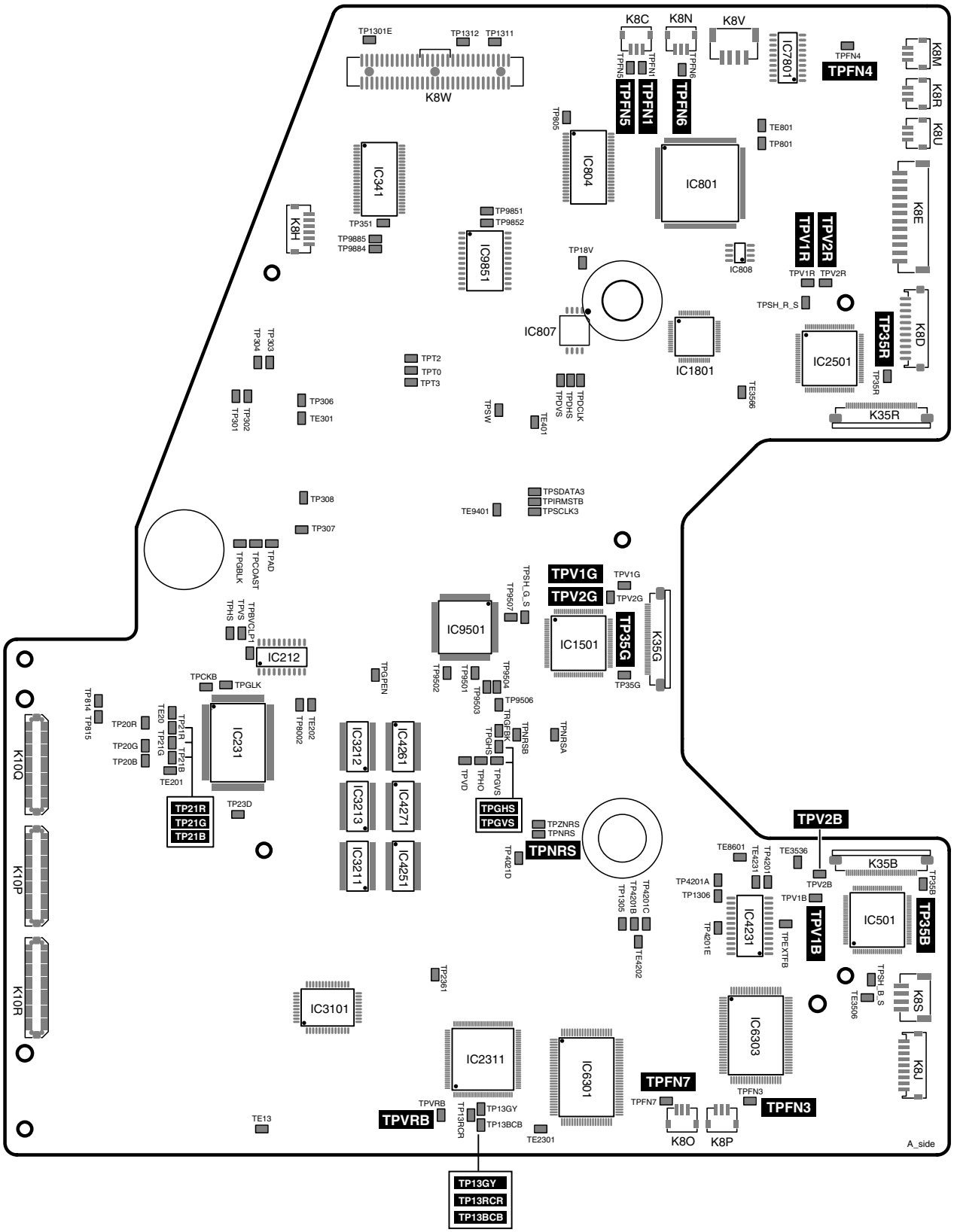

■ Chassis Block Diagrams

● Chassis over view

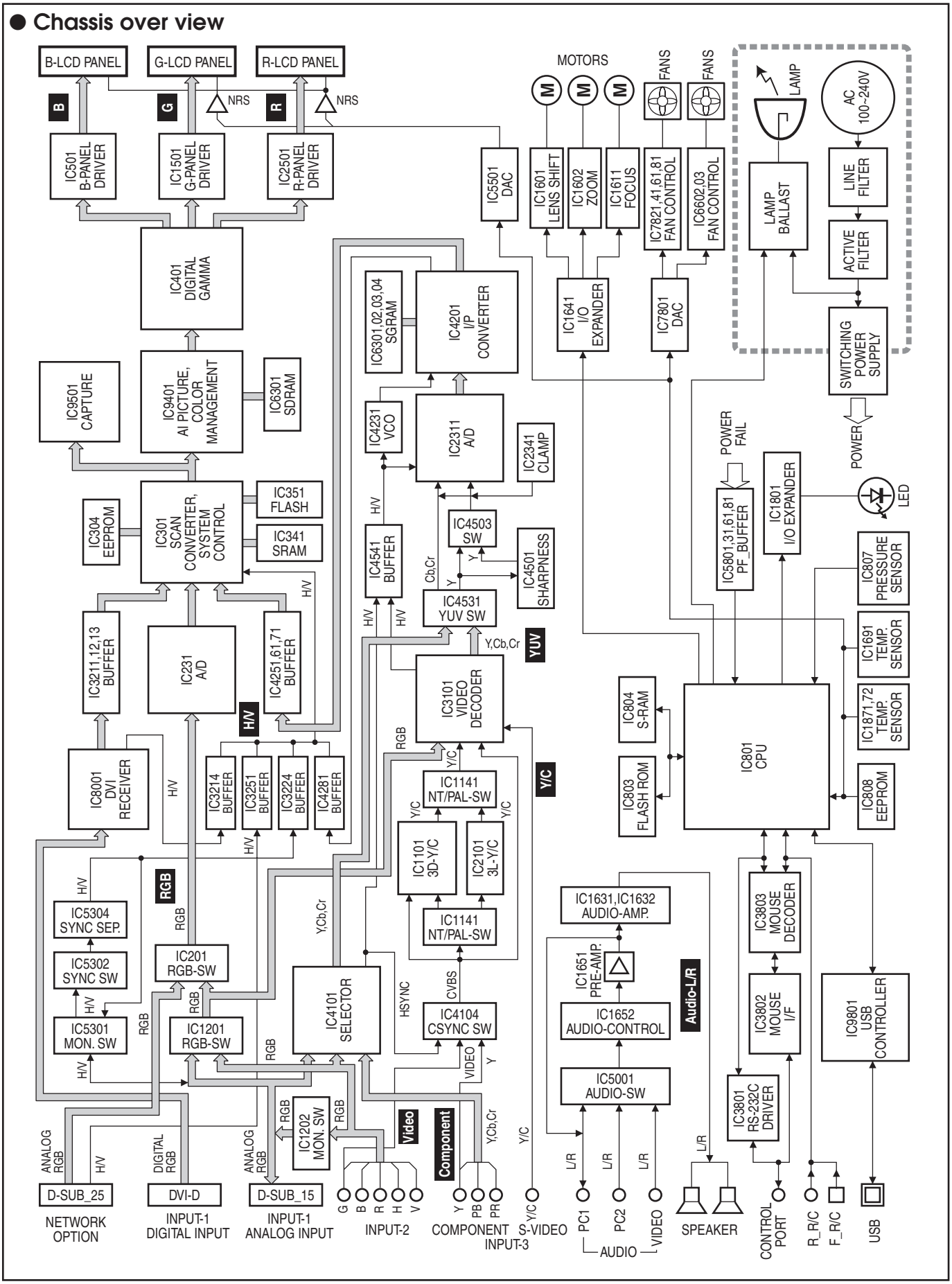

* Following information differs from the previous chassis No. MR3-XP5500, others are the same;
  - IC7301<TA1370>, sync separator between IC4101 and K30R, is deleted.

Inputs & video signal processing stage in AV BOARD

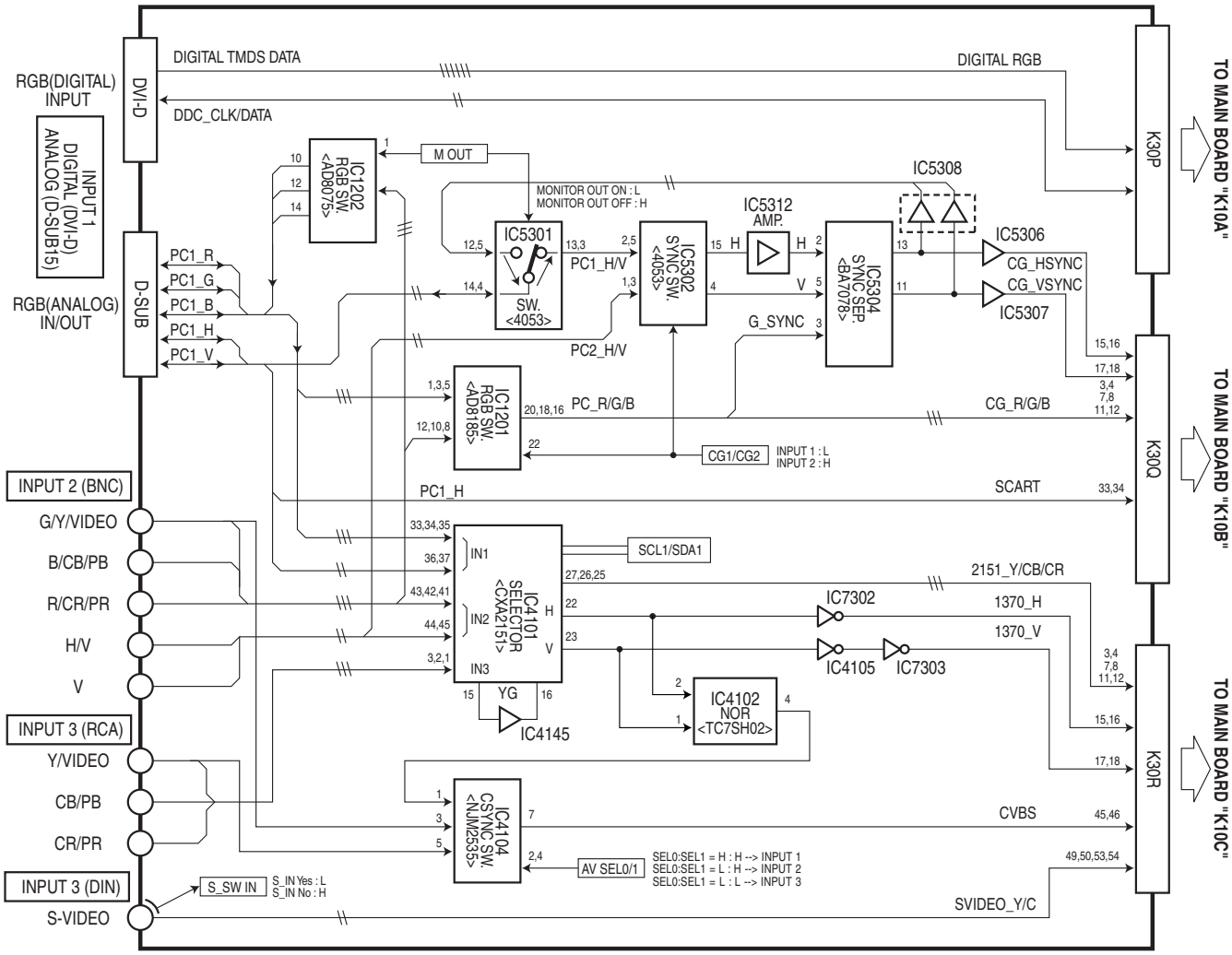

* Following information differs from the previous chassis No. MR3-XP5500, others are the same;
  - Test points TP13RCR/BCB/GY are changed, and the clamp circuit of IC211 is deleted.

Video signal processing stage

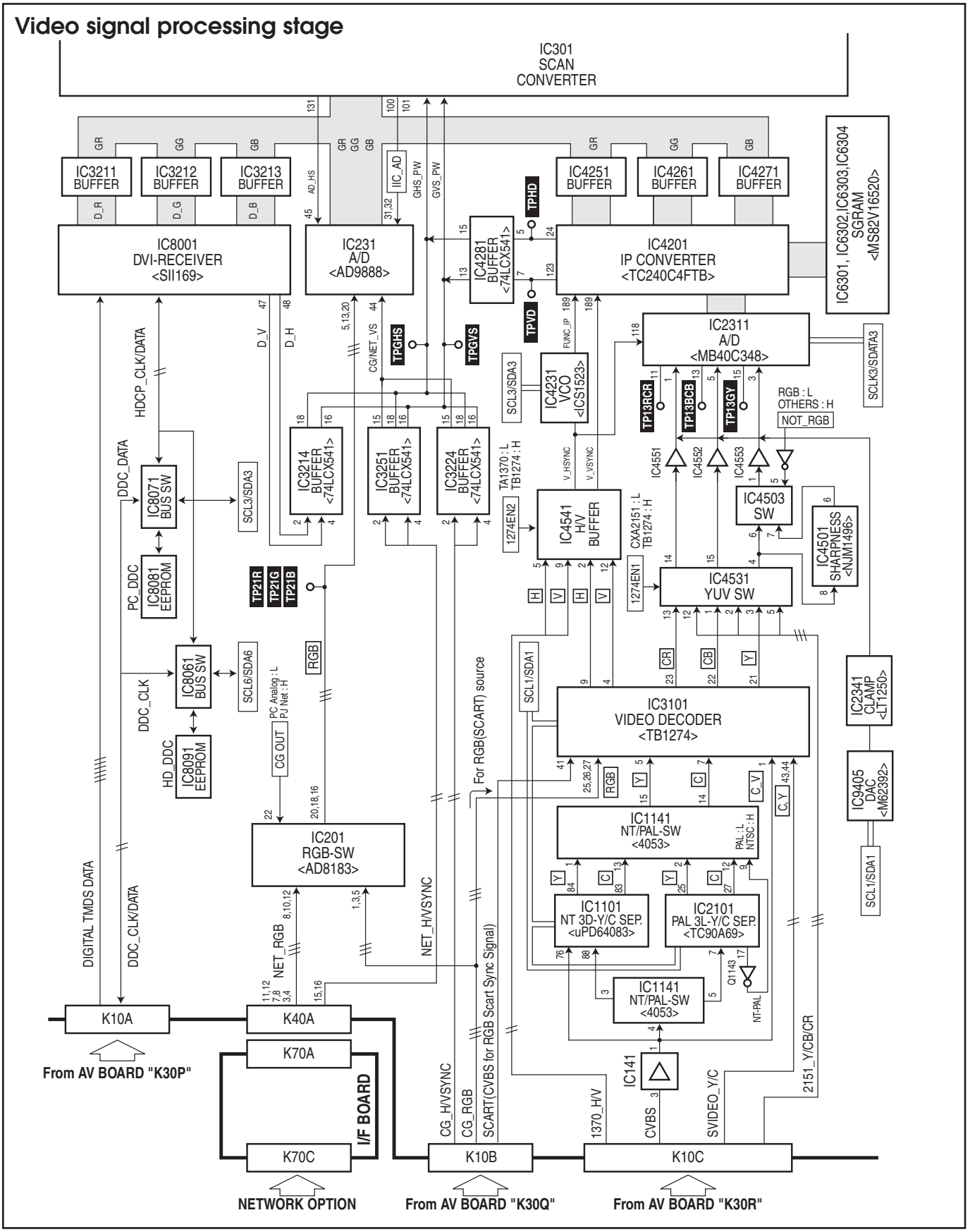

* Following information differs from the previous chassis No. MR3-XP5500, others are the same;
  - The ICs of the LCD panel drivers are changed.

● LCD panel driving stage

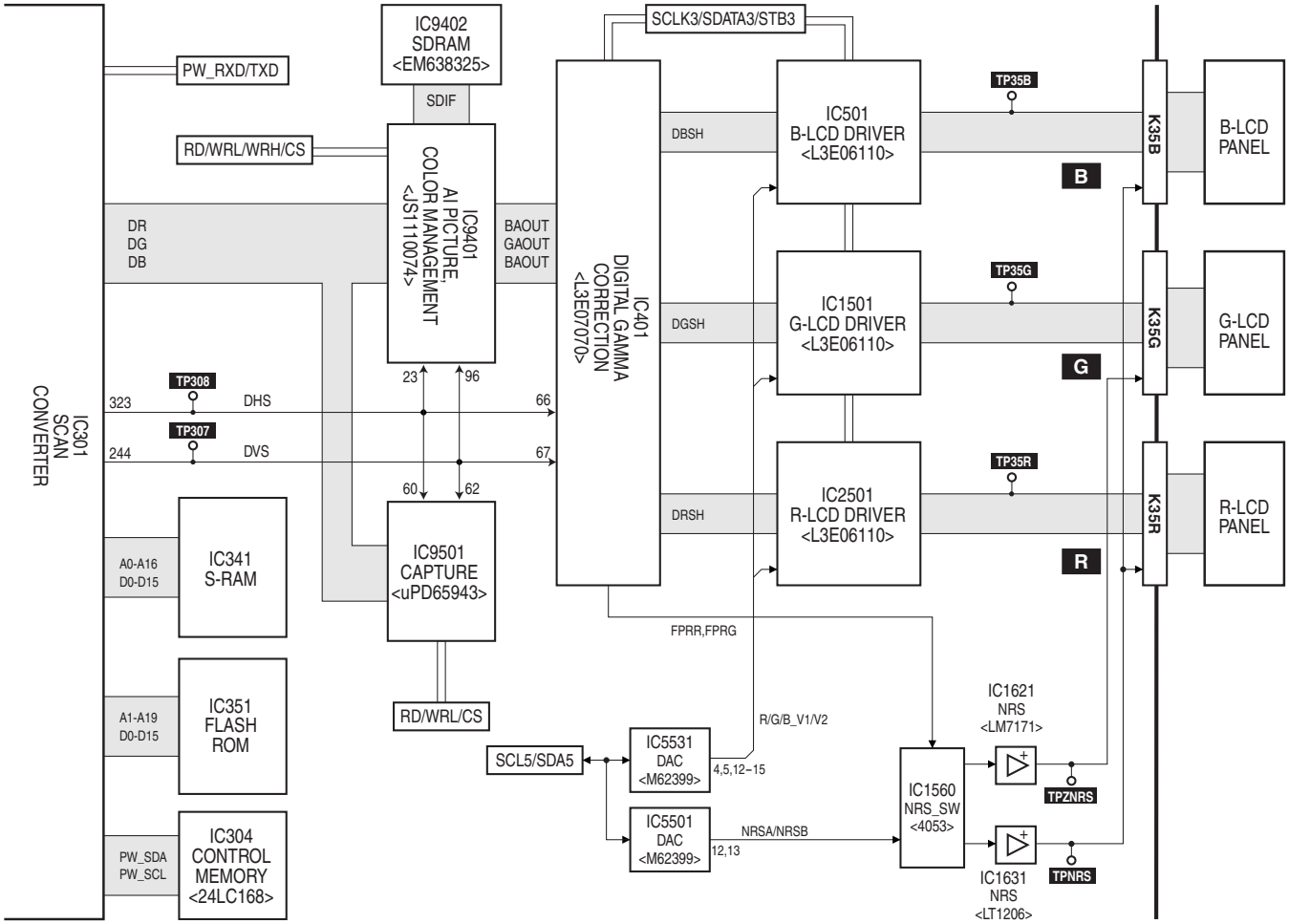

■ Troubleshooting

● No Picture

❊ Differences as below

4. No picture from all of sources

Check HSYNC signal at test point TPGHS and VSYNC signal at TPGVS.
Check RGB S&H signals at test points TP35R, TP35G and TP35B.
Check NRS signals at test point TPNRS and TPZNRS.
Check power supply circuit 15VL and 15VP and peripheral circuit.
Check ICs IC501, IC1501, IC2501, IC9401, IC401 and peripheral circuits.

* Following information differs from the previous one for chassis No. MR3-XP5500, others are the same;
  - The ICs of the LCD panel drivers and IC1801 are changed.

System Controls

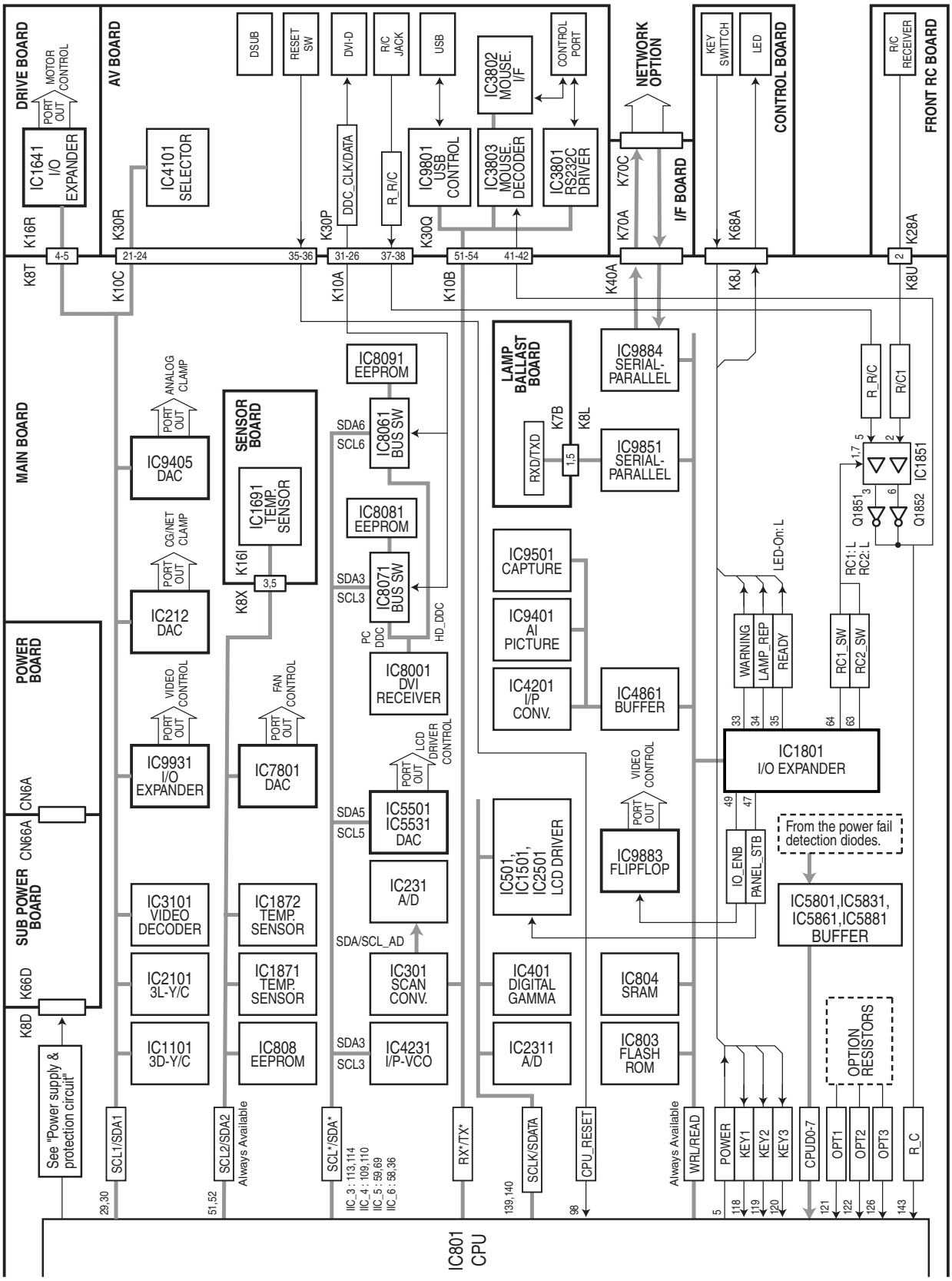

■ Power Supply Lines

* Following information differs from the previous chassis No. MR3-XP5500, others are the same;
  - FAN controls are changed, and 3.3VL/15VL are added.

Power supply lines & protection circuits

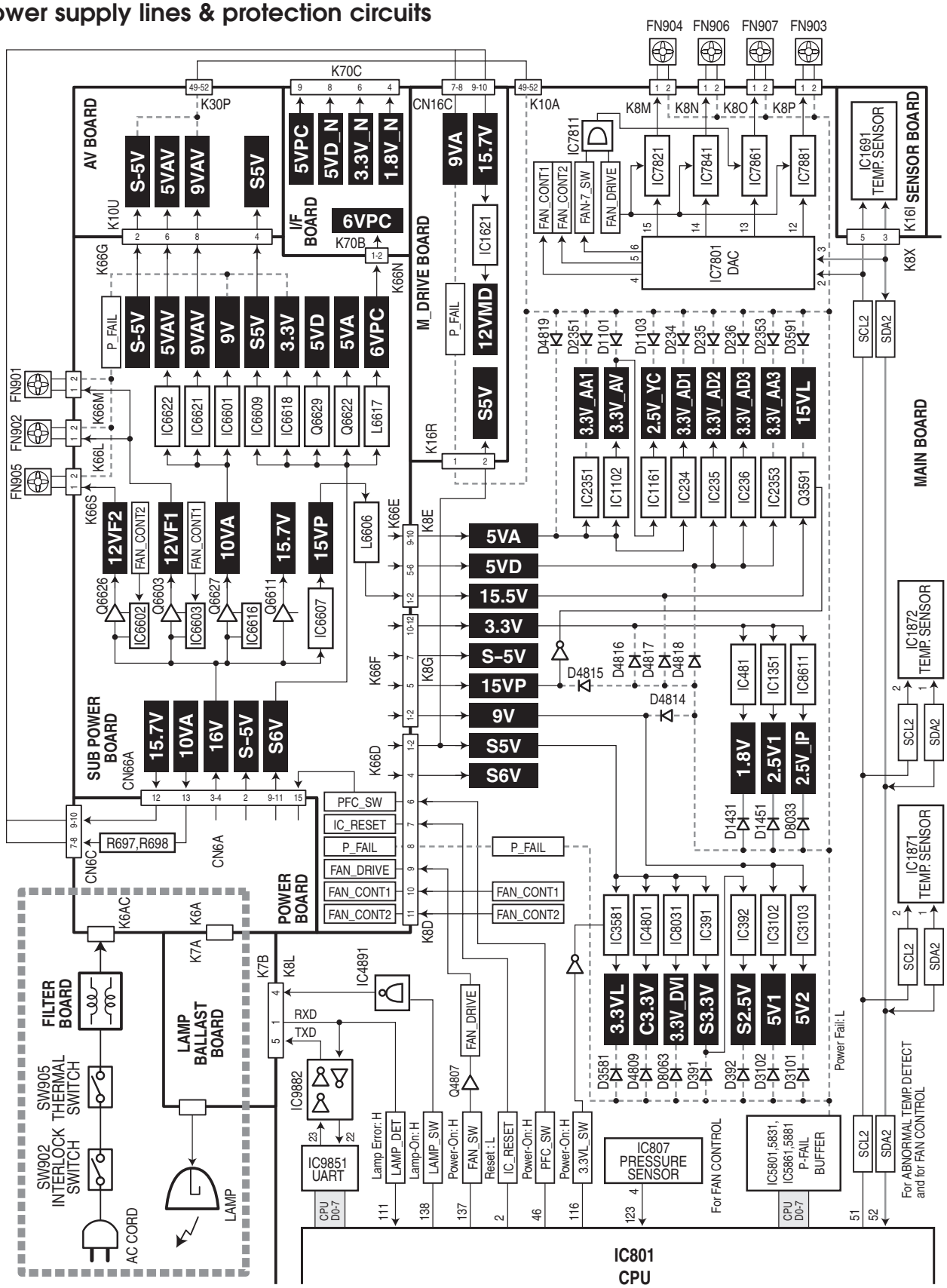

■ Waveforms

* The test points are changed.

VIDEO-IN <IC3101-1>	Y-IN <IC3101-5>	C-IN <IC3101-7>
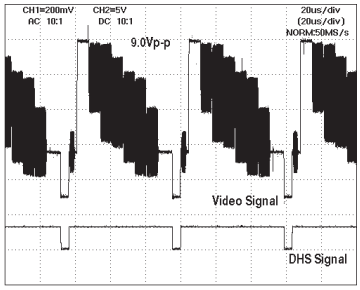	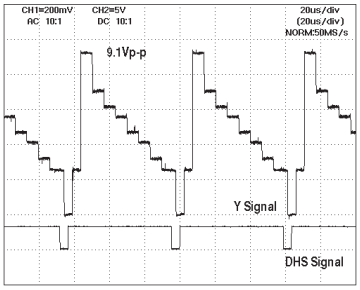	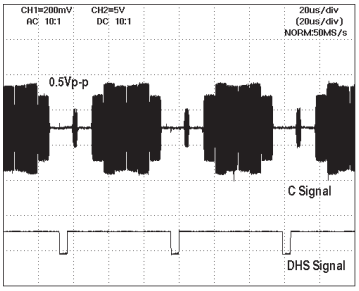
H-SYNC-OUT <IC3101-9>	V-SYNC-OUT <IC3101-4>	Sandcastle-OUT <IC3101-10>
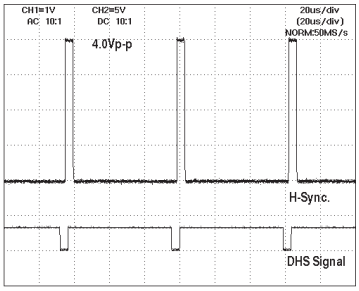	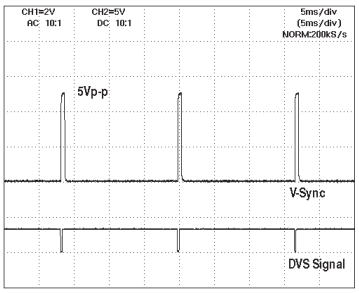	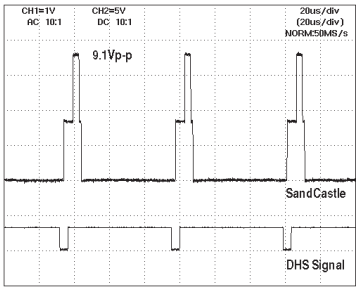
Y-IN <TP13GY>	CB-IN <TP13BCB>	CR-IN <TP13RCR>
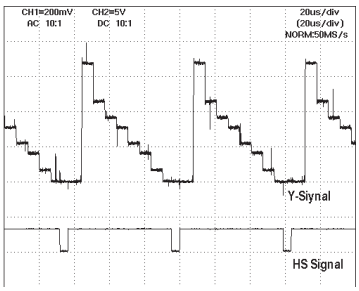	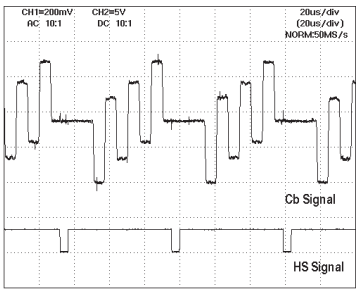	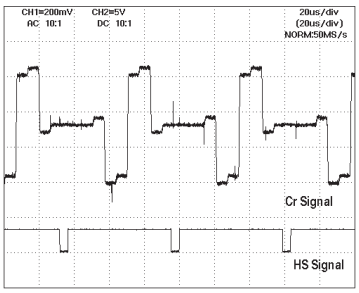
R <TP21R>	G <TP21G>	B <TP21B>
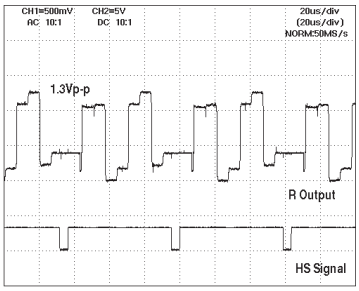	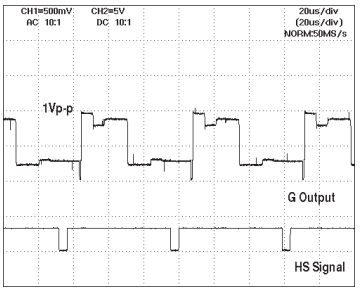	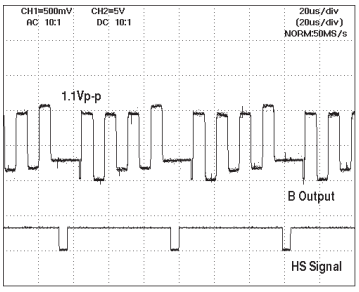
R-S&H OUT <TP35R>	G-S&H OUT <TP35G>	B-S&H OUT <TP35B>
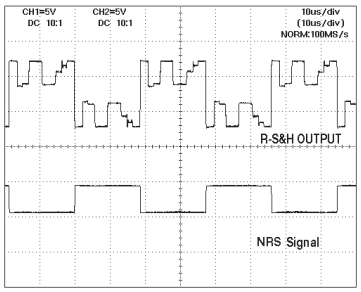	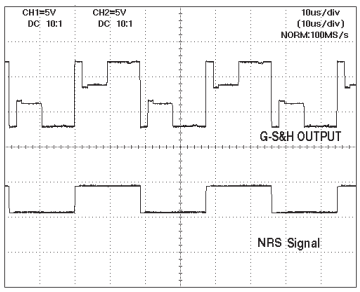	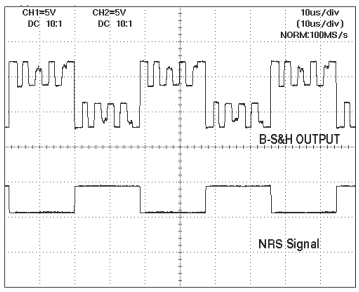

■ Control Port Functions

* Following information differs from the chassis No. MR3-XP5500, others are the same;
  - IC1801 is changed from M66500FP to M66501FP.

● Parallel I/O Expander (IC1801, M66501FP)

Pin No.	Name	Function Name	Function	Polarity	I/O
1	PA1	ECO_SW	Lamp Eco Mode sw	Eco = H	O
2	PA0	TURBO_LED	Bright LED Drive		O
3	Vcc	5V			
4	RD	READ_CPU	Read Select	Active L	I
5	WR	WRL_CPU	Write Select	Active L	I
6	CS	IO_CS	Chip Select	Active L	I
7	RESET	EXP_RST	Reset input	Active H	I
8	GND1	GND	-		
9	A2	PORT_SEL2	Port Select 2		I
10	A1	PORT_SEL1	Port Select 1		I
11	A0	PORT_SEL0	Port Select 0		I
12	D0	D0	Data Bus 0		I/O
13	D1	D1	Data Bus 1		I/O
14	D2	D2	Data Bus 2		I/O
15	D3	D3	Data Bus 3		I/O
16	D4	D4	Data Bus 4		I/O
17	D5	D5	Data Bus 5		I/O
18	D6	D6	Data Bus 6		I/O
19	D7	D7	Data Bus 7		I/O
20	PC7	MOUSE/CPU_SW	CPU/Air Mouse Select	Mouse = L	O
21	PC6	NET_SW	Network Imager On/Off	Net On = L	O
22	PC5	NET_OUT	Network Imager Sync Enable	Enable = L	O
23	PC4	A_MUTE	Mute output		O
24	PC0	CG1/CG2	Computer 1/Computer 2 SW	CG1 = L	O
25	PC1	CG_OUT	RGB (PC Analog)/ RGB (PJ Net) signal selector	PC = L	O
26	PC2	NOT_RGB	Soft Sharpness SW	RGB = L	O
27	PC3	DDC_CONT	DDC PC/CPU SW	CPU = H	O
28	PG0		Not used		I
29	PG1	NET_DET	Network Imager detection	Network = L	I
30	PG2	OPT	Micro Lens Option	without u-Lens = H	I
31	PG3	SCDT_DIF	DVI Sync Detection	DVI = H	I
32	GND2	GND			
33	PF0	WARNING	Temp Warning LED Drive output	LED On = L	O
34	PF1	LAMP_REP	Lamp Replace LED Drive output	LED On = L	O
35	PF2	READY	Ready LED Drive output	LED On = L	O
36	PF3	PD_DIF	PD DVI power down output	Lamp ON = L	O
37	PF4	DVI_CONT	PD0 DVI power down output	Enable = L	O
38	PF5	DDC_WRITE	HD-DDC PC/CPU SW	CPU = H	O
39	PF6	IRM_STB	L3E07070 Strobe	ON = H	O
40	PF7	IRM_RST	L3E07070 Reset	Reset = L	O
41	Vcc	5 V			-
42	PE0	A SW1	Audio SW 1 (SW1/SW2 : L/L = IN-1, H/L = IN-2, L/H = IN-3)		O
43	PE1	A SW2	Audio SW 2		O
44	PE2	SYNC_OFF	Sync OFF for RGB input	Sync OFF = L	O
45	PE3	SH_R_STB	Sample & Hold Strobe signal_R		O
46	PE4	SP_OFF	Speaker output On/Off	On = H	O
47	PE5	SH_G_STB	Sample & Hold Strobe signal_G		O
48	PE6	SH_B_STB	Sample & Hold Strobe signal_B		
49	PE7	IO_ENB	BUS I/O Enable	Enable = L	O
50	GND3	GND	-		
51	PB0	LENS_TOP	Lens Top Detection	Top=L	I
52	PB1		Not used		
53	PB2	LENS_BOTTOM	Lens Bottom Detection	Bottom=L	I
54	PB3		Not used		I
55	PB4		Not used		I
56	PB5	S-SWIN	S-Input Detection Yes/No	Yes = H	I
57	PB6		Not used		I
58	PB7		Not used		I
59	PA7	RC_RESET	Air Mouse IC Reset	H - L - H = Reset	I
60	PA6	RCIDSW3	Remote control code SW (1/2/3 : LLL = Code1, HLL = Code2, - - -)		O
61	PA5	RCIDSW2	Remote control code SW		O
62	PA4	RCIDSW1	Remote control code SW		O
63	PA3	RC2_SW	Rear remote control pre-amp. output On/Off	Enable = L	O
64	PA2	RC1_SW	Front remote control pre-amp output On/Off	Enable = L	O

* Following information differs from the previous chassis No. MR3-XP5500, others are the same;
- The functions of IC801 and IC7801 are changed, and IC5501 & IC5531 are added.

● System Control & I/O Port Table (IC801)

See original page.52-53

Pin No.	Name		Function Name	Function	Polarity	I/O
116	PE6/TIOC2A	Original		Not used		O
		Supplement	3.3VL_SW	3.3VL_On/Off	ON = H	O
126	PF7/AN7	Original	OPT3	Not used		I
		Supplement	OPT3	Panel Option		I

● IIC Bus D/A Converter (IC7801, M62399FP)

See original page.56

Pin No.	Name		Function Name	Function	Polarity	I/O
6	A07	Original		Not used		O
		Supplement	FAN-7_SW	FN907 for cooling lamp bottom	ON = H	O
		Original				-
		Supplement				-

● IIC Bus D/A Converter (IC5501, M62399FP)

Additional Item

Pin No.	Name	Function		I/O
1	R	Reset Input		I
2	SCL	IIC BUS SCL	SCL5	I
3	SDA	IIC BUS SDA	SDA5	I/O
4	A05	Not used		O
5	A06	REF_R		O
6	A07	REF_G		O
7	A08	REF_B		O
8	VrefL	DAC Lower Reference Voltage input		-
9	VrefU 1	DAC Upper Reference Voltage input (CH5~CH8)		-
10	Vss	GND		-
11	VrefU 2	DAC Upper Reference Voltage input (CH1~CH 4)		-
12	A01	NRSA		O
13	A02	NRSB		O
14	A03	Not used		O
15	A04	Not used		O
16	Vcc	Power Supply for Output Buffer (15V)		-
17	Vdd	Power Supply +5V		-
18	CS2	Slave address setting port 2 (Vdd)		I
19	CS1	Slave address setting port 1 (Vdd)		I
20	CS0	Slave address setting port 0 (Vdd)		I

● IIC Bus D/A Converter (IC5531, M62399FP)

Additional Item

Pin No.	Name	Function		I/O
1	R	Serial Data output port (Not connected)		O
2	SCL	IIC BUS SCL	SCL5	I
3	SDA	IIC BUS SDA	SDA5	I/O
4	A05	R_V1		O
5	A06	R_V2		O
6	A07	Not used		O
7	A08	Not used		O
8	VrefL	DAC Lower Reference Voltage input		-
9	VrefU 1	DAC Upper Reference Voltage input (CH5~CH8)		-
10	Vss	GND		-
11	VrefU2	DAC Upper Reference Voltage input (CH1~CH 4)		-
12	A01	G_V1		O
13	A02	G_V2		O
14	A03	B_V1		O
15	A04	B_V2		O
16	Vcc	Power Supply for Output Buffer (15V)		-
17	Vdd	Power Supply +5V		-
18	CS2	Slave address setting port 2 (Vdd)		I
19	CS1	Slave address setting port 1 (GND)		I
20	CS0	Slave address setting port 0 (GND)		I

■ IC Block Diagrams

❊ Additional items as below: See original page.59-70

● L3E07070 <Signal Processor for TFT LCD, IC401>

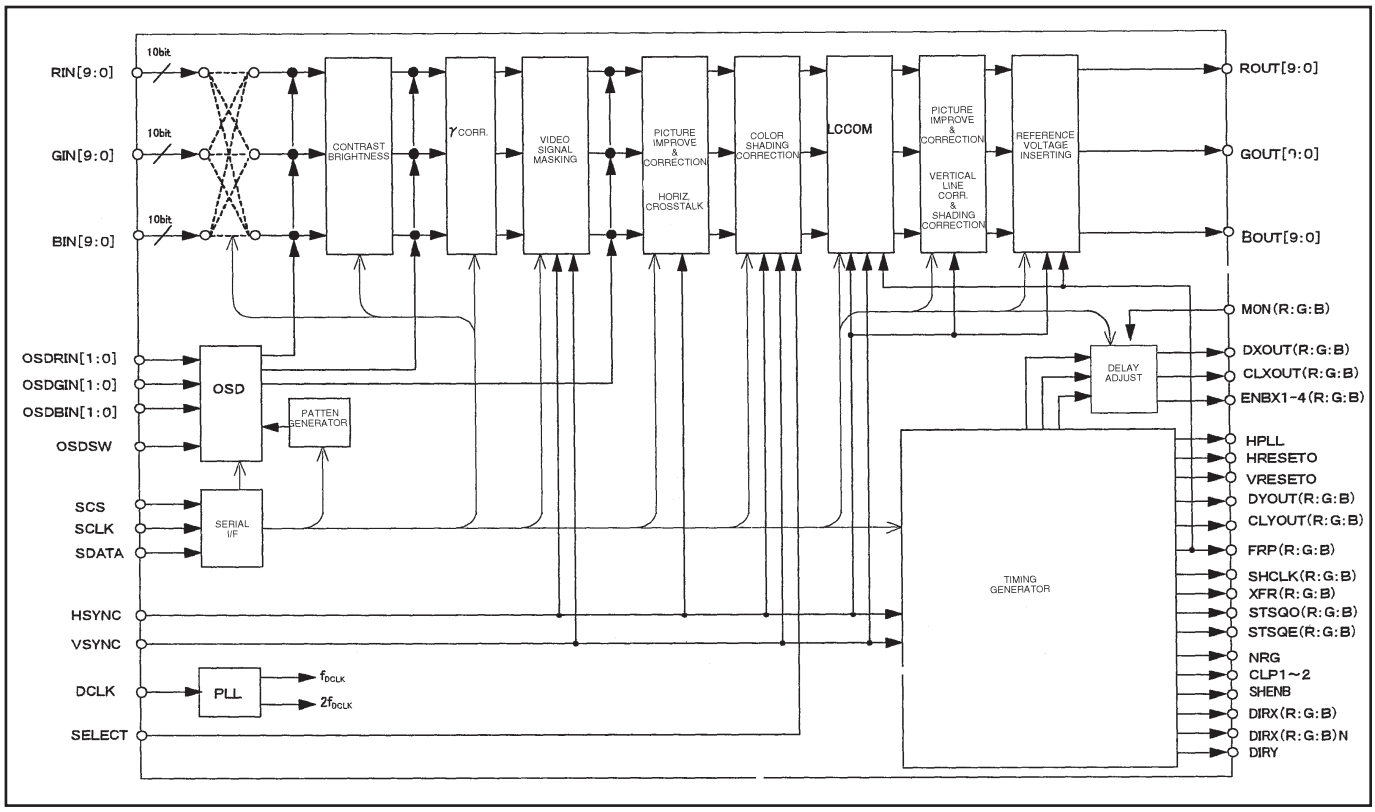

● L3E06110 <LCD Driver, IC501, IC1501, IC2501>

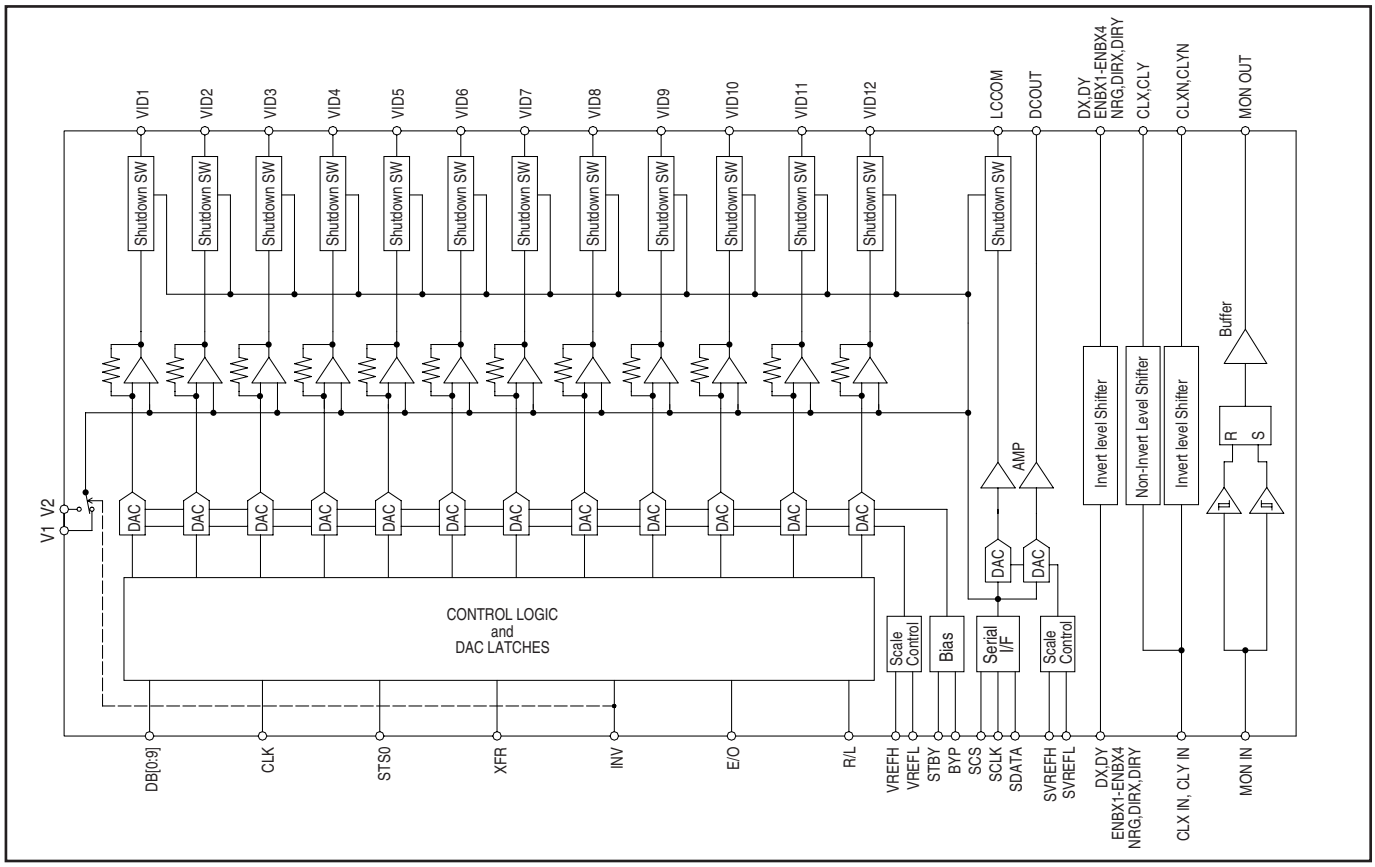

■ Electrical Parts List

Product safety should be considered when a component replacement is made in any area of a projector.
Components indicated by a ⚠ mark in this parts list and the circuit diagram show components whose value have special significance to product safety. It is particularly recommended that only parts specified on the following parts list be used for components replacement pointed out by the mark.

● Read Description in the parts list

Read description in the Capacitor and Resistor as follows:

CAPACITOR CERAMIC 100P K 50V

Rated Voltage

Tolerance Symbols:

Less than 10pF

A : Not specified	B : ±0.1pF	C : ±0.25pF
D : ±0.5pF	E : +0 -1pF	F : ±1PF
G : ±2pF	H : +0.1 -0pF	L : +0 -0.1pF
R : ±0.25 -0pF	S : +0-0.25pF	

More than 10pF

A : Not specified	B : ±0.1%	C : ±0.25%
D : ±0.5%	F : ±1%	G : ±2%
H : ±3%	J : ±5%	K : ±10%
L : ±15%	M : ±20%	N : ±30%
P : +100-0%	Q : +30-10%	T : +50-10%
U : +75-10%	V : +20-10%	W : +100-10%
X : +40-20%	Y : +150-10%	Z : +80-20%

Rated value: P=pico farad, U=micro farad

Material:

CERAMIC..... Ceramic
MT-PAPER..... Metallized Paper
POLYESTER..... Polyester
MT-POLYEST..... Metallized Polyester
POLYPRO..... Polypropylene
MT-POLYPRO.... Metallized Polypropylene
COMPO FILM..... Composite film
MT-COMPO..... Metallized Composite
STYRENE..... Styrene
TA-SOLID..... Tantalum Oxide Solid Electrolytic
AL-SOLID..... Aluminium Solid Electrolytic
ELECT..... Aluminum Foil Electrolytic
NP-ELECT..... Non-polarised Electrolytic
OS-SOLID..... Aluminium Solid with Organic Semiconductive Electrolytic
POS-SOLID..... Polymerized Organic Semiconductive
DL-ELECT..... Double Layered Electrolytic
PPS-FILM..... Polyphenylene Sulfide Film
MT-PPS-FILM..... Metalized Polyphenylene Sulfide Film
MT-PEN-FILM..... Metalized Polyethylenenaphthalate Film
CAPACITOR..... Other

RESISTOR CARBON 4.7K J A 1/4W

Rated Wattage

Performance Symbols:
A: General B: Non flammable Z: Low noise
Other: Temperature coefficient

T: ±10ppm/°C	U: ±25ppm/°C	C: ±50ppm/°C
D: ±100ppm/°C	E: ±200ppm/°C	F: ±250ppm/°C
G: ±350ppm/°C	H: ±1000ppm/°C±10%	W: ±1200ppm/°C±10%
Y: ±1400ppm/°C±10%	J: ±2000ppm/°C±10%	K: ±2400ppm/°C±10%
L: ±2700ppm/°C±10%	M: ±3000ppm/°C±10%	N: ±3300ppm/°C±10%
P: ±3600ppm/°C±10%	Q: ±3900ppm/°C±10%	R: ±4200ppm/°C±10%
S: ±4300ppm/°C±10%	V: ±4500ppm/°C±10%	X: ±8000ppm/°C±10%

Tolerance Symbols:

A: ±0.05%	B: ±0.1%	C: ±0.25%	D: ±0.5%
F: ±1%	G: ±2%	J: ±5%	K: ±10%
M: ±20%	P: +5-15%	Z: 0 ohm	

Rated value, ohms:
K: 1,000, M: 1,000,000

Material:

CARBON..... Carbon
MT-FILM..... Metal Film
OXIDE-MT..... Oxide Metal Film
SOLID..... Composition
MT-GLAZE..... Metal Glaze
WIRE WOUND... Wire Wound
CERAMIC RES.. Ceramic
FUSIBLE RES.... Fusible
RESISTOR ..... Other

Electrical Parts List

Note: Parts order must contain Chassis No., Part No., and Descriptions.

● OUT OF CIRCUIT BOARD

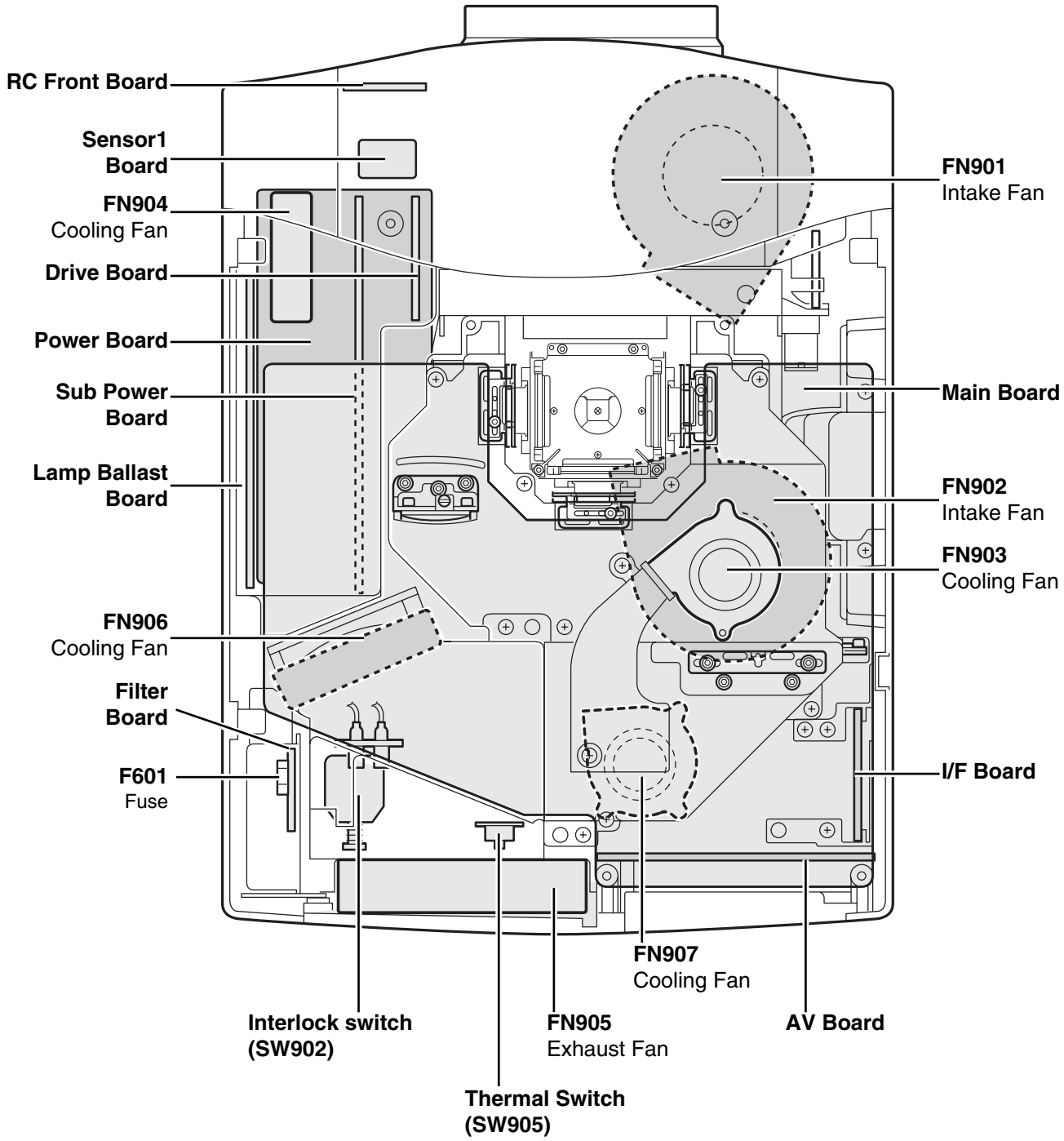

Electrical Parts List

Key No.	Part No.	Description

ASSEMBLIED BOARDS

⚠	610 315 0345	ASSY,PWB,MAIN MH5A
⚠	610 318 8560	ASSY,PWB,A/V ME5A
⚠	610 318 8577	ASSY,PWB I/F ME5A
⚠	610 318 8591	ASSY,PWB,POWER ME5A
⚠	610 318 8607	ASSY,PWB,SUB POWER ME5A
⚠	610 318 8614	ASSY,PWB,DRIVE ME5A
⚠	610 318 8621	ASSY,PWB,FILTER ME5A
⚠	610 318 8645	ASSY,PWB,CONTROL ME5A
⚠	610 318 8652	ASSY,PWB,RC FRONT ME5A
⚠	610 318 8676	ASSY,PWB,SENSOR 1 ME5A

OUT OF CIRCUIT BOARDS

L901	645 003 3834	CORE,FERRITE
L902	645 003 3834	CORE,FERRITE
⚠LF901	645 042 4489	UNIT,NOISE FILTER
⚠LP900	610 314 9127	COMPL,OPTICAL LAMP-ME5A
⚠A901	645 068 1424	UNIT,BALLAST
⚠FN901	645 061 7539	MOTOR,FAN DC 13.0W
⚠FN902	645 061 7539	MOTOR,FAN DC 13.0W
⚠FN903	645 053 7523	MOTOR,FAN DC 1.68W
⚠FN904	645 053 7523	MOTOR,FAN DC 1.68W
⚠FN905	645 061 4897	MOTOR,FAN DC 5.28W
⚠FN906	645 048 4001	MOTOR,FAN DC 2.4W
⚠FN907	645 061 4903	MOTOR,FAN DC 2.04W
SP901	645 047 7584	SPEAKER,8
SP902	645 047 7584	SPEAKER,8
⚠SW902	645 031 7743	SWITCH,PUSH 2P-2TX2
⚠SW905	645 050 3580	SWITCH,THERMAL(90DEG)

MAIN BOARD

610 315 0345 ASSY,PWB,MAIN MH5A

TRANSISTOR

Q1101	405 134 5925	TR 2SA1037AK-T146-R
	405 147 2215	TR 2SA1037AK-S-T146
	405 002 0318	TR 2SA1037K T146 R
	405 002 0417	TR 2SA1037K T146 S
	405 002 6726	TR 2SA1179-M6-TB
	405 002 6924	TR 2SA1179-M7-TB
	405 163 1513	TR 2SA1179N-M6-TB
	405 163 2718	TR 2SA1179N-M7-TB
Q1141	405 134 5925	TR 2SA1037AK-T146-R
	405 147 2215	TR 2SA1037AK-S-T146
	405 002 0318	TR 2SA1037K T146 R
	405 002 0417	TR 2SA1037K T146 S
	405 002 6726	TR 2SA1179-M6-TB
	405 002 6924	TR 2SA1179-M7-TB
	405 163 1513	TR 2SA1179N-M6-TB
	405 163 2718	TR 2SA1179N-M7-TB
Q1142	405 134 5925	TR 2SA1037AK-T146-R
	405 147 2215	TR 2SA1037AK-S-T146
	405 002 0318	TR 2SA1037K T146 R
	405 002 0417	TR 2SA1037K T146 S
	405 002 6726	TR 2SA1179-M6-TB
	405 002 6924	TR 2SA1179-M7-TB
	405 163 1513	TR 2SA1179N-M6-TB
	405 163 2718	TR 2SA1179N-M7-TB
Q1143	405 014 4519	TR 2SC2412K T146 R
	405 014 4618	TR 2SC2412K T146 S
	405 015 8724	TR 2SC2812-L6-TB
	405 015 8922	TR 2SC2812-L7-TB
	405 163 1612	TR 2SC2812N-L6-TB0
	405 163 1711	TR 2SC2812N-L7-TB0
Q1144	405 134 5925	TR 2SA1037AK-T146-R
	405 147 2215	TR 2SA1037AK-S-T146
	405 002 0318	TR 2SA1037K T146 R
	405 002 0417	TR 2SA1037K T146 S
	405 002 6726	TR 2SA1179-M6-TB
	405 002 6924	TR 2SA1179-M7-TB
	405 163 1513	TR 2SA1179N-M6-TB
	405 163 2718	TR 2SA1179N-M7-TB
Q1145	405 014 4519	TR 2SC2412K T146 R
	405 014 4618	TR 2SC2412K T146 S
	405 015 8724	TR 2SC2812-L6-TB
	405 015 8922	TR 2SC2812-L7-TB
	405 163 1612	TR 2SC2812N-L6-TB0
	405 163 1711	TR 2SC2812N-L7-TB0
Q1146	405 134 5925	TR 2SA1037AK-T146-R
	405 147 2215	TR 2SA1037AK-S-T146
	405 002 0318	TR 2SA1037K T146 R
	405 002 0417	TR 2SA1037K T146 S
	405 002 6726	TR 2SA1179-M6-TB
	405 002 6924	TR 2SA1179-M7-TB
	405 163 1513	TR 2SA1179N-M6-TB
	405 163 2718	TR 2SA1179N-M7-TB
Q1147	405 134 5925	TR 2SA1037AK-T146-R
	405 147 2215	TR 2SA1037AK-S-T146
	405 002 0318	TR 2SA1037K T146 R
	405 002 0417	TR 2SA1037K T146 S
	405 002 6726	TR 2SA1179-M6-TB
	405 002 6924	TR 2SA1179-M7-TB
	405 163 1513	TR 2SA1179N-M6-TB
	405 163 2718	TR 2SA1179N-M7-TB
Q1148	405 134 5925	TR 2SA1037AK-T146-R
	405 147 2215	TR 2SA1037AK-S-T146
	405 002 0318	TR 2SA1037K T146 R
	405 002 0417	TR 2SA1037K T146 S
	405 002 6726	TR 2SA1179-M6-TB
	405 002 6924	TR 2SA1179-M7-TB
	405 163 1513	TR 2SA1179N-M6-TB
	405 163 2718	TR 2SA1179N-M7-TB
Q1149	405 014 4519	TR 2SC2412K T146 R
	405 014 4618	TR 2SC2412K T146 S
	405 015 8724	TR 2SC2812-L6-TB
	405 015 8922	TR 2SC2812-L7-TB
	405 163 1612	TR 2SC2812N-L6-TB0
	405 163 1711	TR 2SC2812N-L7-TB0
Q1151	405 134 5925	TR 2SA1037AK-T146-R
	405 147 2215	TR 2SA1037AK-S-T146
	405 002 0318	TR 2SA1037K T146 R
	405 002 0417	TR 2SA1037K T146 S
	405 002 6726	TR 2SA1179-M6-TB
	405 002 6924	TR 2SA1179-M7-TB
	405 163 1513	TR 2SA1179N-M6-TB
	405 163 2718	TR 2SA1179N-M7-TB
Q1161	405 134 5925	TR 2SA1037AK-T146-R
	405 147 2215	TR 2SA1037AK-S-T146
	405 002 0318	TR 2SA1037K T146 R
	405 002 0417	TR 2SA1037K T146 S
	405 002 6726	TR 2SA1179-M6-TB
	405 002 6924	TR 2SA1179-M7-TB
	405 163 1513	TR 2SA1179N-M6-TB
	405 163 2718	TR 2SA1179N-M7-TB
Q1163	405 134 5925	TR 2SA1037AK-T146-R
	405 147 2215	TR 2SA1037AK-S-T146
	405 002 0318	TR 2SA1037K T146 R

Electrical Parts List

Key No.	Part No.	Description
	405 002 0417	TR 2SA1037K T146 S
	405 002 6726	TR 2SA1179-M6-TB
	405 002 6924	TR 2SA1179-M7-TB
	405 163 1513	TR 2SA1179N-M6-TB
	405 163 2718	TR 2SA1179N-M7-TB
Q141	405 014 4519	TR 2SC2412K T146 R
	405 014 4618	TR 2SC2412K T146 S
	405 015 8724	TR 2SC2812-L6-TB
	405 015 8922	TR 2SC2812-L7-TB
	405 163 1612	TR 2SC2812N-L6-TB0
	405 163 1711	TR 2SC2812N-L7-TB0
Q142	405 014 4519	TR 2SC2412K T146 R
	405 014 4618	TR 2SC2412K T146 S
	405 015 8724	TR 2SC2812-L6-TB
	405 015 8922	TR 2SC2812-L7-TB
	405 163 1612	TR 2SC2812N-L6-TB0
	405 163 1711	TR 2SC2812N-L7-TB0
Q143	405 014 4519	TR 2SC2412K T146 R
	405 014 4618	TR 2SC2412K T146 S
	405 015 8724	TR 2SC2812-L6-TB
	405 015 8922	TR 2SC2812-L7-TB
	405 163 1612	TR 2SC2812N-L6-TB0
	405 163 1711	TR 2SC2812N-L7-TB0
Q144	405 134 5925	TR 2SA1037AK-T146-R
	405 147 2215	TR 2SA1037AK-S-T146
	405 002 0318	TR 2SA1037K T146 R
	405 002 0417	TR 2SA1037K T146 S
	405 002 6726	TR 2SA1179-M6-TB
	405 002 6924	TR 2SA1179-M7-TB
	405 163 1513	TR 2SA1179N-M6-TB
	405 163 2718	TR 2SA1179N-M7-TB
Q147	405 014 4519	TR 2SC2412K T146 R
	405 014 4618	TR 2SC2412K T146 S
	405 015 8724	TR 2SC2812-L6-TB
	405 015 8922	TR 2SC2812-L7-TB
	405 163 1612	TR 2SC2812N-L6-TB0
	405 163 1711	TR 2SC2812N-L7-TB0
Q148	405 134 5925	TR 2SA1037AK-T146-R
	405 147 2215	TR 2SA1037AK-S-T146
	405 002 0318	TR 2SA1037K T146 R
	405 002 0417	TR 2SA1037K T146 S
	405 002 6726	TR 2SA1179-M6-TB
	405 002 6924	TR 2SA1179-M7-TB
	405 163 1513	TR 2SA1179N-M6-TB
	405 163 2718	TR 2SA1179N-M7-TB
Q149	405 014 4519	TR 2SC2412K T146 R
	405 014 4618	TR 2SC2412K T146 S
	405 015 8724	TR 2SC2812-L6-TB
	405 015 8922	TR 2SC2812-L7-TB
	405 163 1612	TR 2SC2812N-L6-TB0
	405 163 1711	TR 2SC2812N-L7-TB0
Q1601	405 014 4519	TR 2SC2412K T146 R
	405 014 4618	TR 2SC2412K T146 S
	405 015 8724	TR 2SC2812-L6-TB
	405 015 8922	TR 2SC2812-L7-TB
	405 163 1612	TR 2SC2812N-L6-TB0
	405 163 1711	TR 2SC2812N-L7-TB0
Q1602	405 014 4519	TR 2SC2412K T146 R
	405 014 4618	TR 2SC2412K T146 S
	405 015 8724	TR 2SC2812-L6-TB
	405 015 8922	TR 2SC2812-L7-TB
	405 163 1612	TR 2SC2812N-L6-TB0
	405 163 1711	TR 2SC2812N-L7-TB0
Q1851	405 014 4519	TR 2SC2412K T146 R
	405 014 4618	TR 2SC2412K T146 S
	405 015 8724	TR 2SC2812-L6-TB
	405 015 8922	TR 2SC2812-L7-TB
	405 163 1612	TR 2SC2812N-L6-TB0
	405 163 1711	TR 2SC2812N-L7-TB0
Q1852	405 014 4519	TR 2SC2412K T146 R
	405 014 4618	TR 2SC2412K T146 S
	405 015 8724	TR 2SC2812-L6-TB
	405 015 8922	TR 2SC2812-L7-TB
	405 163 1612	TR 2SC2812N-L6-TB0
	405 163 1711	TR 2SC2812N-L7-TB0
Q2101	405 014 4519	TR 2SC2412K T146 R
	405 014 4618	TR 2SC2412K T146 S
	405 015 8724	TR 2SC2812-L6-TB
	405 015 8922	TR 2SC2812-L7-TB
	405 163 1612	TR 2SC2812N-L6-TB0
	405 163 1711	TR 2SC2812N-L7-TB0
Q2102	405 014 4519	TR 2SC2412K T146 R
	405 014 4618	TR 2SC2412K T146 S
	405 015 8724	TR 2SC2812-L6-TB
	405 015 8922	TR 2SC2812-L7-TB
	405 163 1612	TR 2SC2812N-L6-TB0
	405 163 1711	TR 2SC2812N-L7-TB0
Q2361	405 014 4519	TR 2SC2412K T146 R
	405 014 4618	TR 2SC2412K T146 S
	405 015 8724	TR 2SC2812-L6-TB
	405 015 8922	TR 2SC2812-L7-TB
	405 163 1612	TR 2SC2812N-L6-TB0
	405 163 1711	TR 2SC2812N-L7-TB0
Q3103	405 014 4519	TR 2SC2412K T146 R
	405 014 4618	TR 2SC2412K T146 S
	405 015 8724	TR 2SC2812-L6-TB
	405 015 8922	TR 2SC2812-L7-TB
	405 163 1612	TR 2SC2812N-L6-TB0
	405 163 1711	TR 2SC2812N-L7-TB0
Q3111	405 134 5925	TR 2SA1037AK-T146-R
	405 147 2215	TR 2SA1037AK-S-T146
	405 002 0318	TR 2SA1037K T146 R
	405 002 0417	TR 2SA1037K T146 S
	405 002 6726	TR 2SA1179-M6-TB
	405 002 6924	TR 2SA1179-M7-TB
	405 163 1513	TR 2SA1179N-M6-TB
	405 163 2718	TR 2SA1179N-M7-TB
Q3112	405 134 5925	TR 2SA1037AK-T146-R
	405 147 2215	TR 2SA1037AK-S-T146
	405 002 0318	TR 2SA1037K T146 R
	405 002 0417	TR 2SA1037K T146 S
	405 002 6726	TR 2SA1179-M6-TB
	405 002 6924	TR 2SA1179-M7-TB
	405 163 1513	TR 2SA1179N-M6-TB
	405 163 2718	TR 2SA1179N-M7-TB
Q3113	405 134 5925	TR 2SA1037AK-T146-R
	405 147 2215	TR 2SA1037AK-S-T146
	405 002 0318	TR 2SA1037K T146 R
	405 002 0417	TR 2SA1037K T146 S
	405 002 6726	TR 2SA1179-M6-TB
	405 002 6924	TR 2SA1179-M7-TB
	405 163 1513	TR 2SA1179N-M6-TB
	405 163 2718	TR 2SA1179N-M7-TB
Q3161	405 014 4519	TR 2SC2412K T146 R
	405 014 4618	TR 2SC2412K T146 S
	405 015 8724	TR 2SC2812-L6-TB
	405 015 8922	TR 2SC2812-L7-TB
	405 163 1612	TR 2SC2812N-L6-TB0
	405 163 1711	TR 2SC2812N-L7-TB0
Q3162	405 014 4519	TR 2SC2412K T146 R
	405 014 4618	TR 2SC2412K T146 S
	405 015 8724	TR 2SC2812-L6-TB
	405 015 8922	TR 2SC2812-L7-TB
	405 163 1612	TR 2SC2812N-L6-TB0

Electrical Parts List

Key No.	Part No.	Description
	405 163 1711	TR 2SC2812N-L7-TB0
Q3163	405 014 4519	TR 2SC2412K T146 R
	405 014 4618	TR 2SC2412K T146 S
	405 015 8724	TR 2SC2812-L6-TB
	405 015 8922	TR 2SC2812-L7-TB
	405 163 1612	TR 2SC2812N-L6-TB0
	405 163 1711	TR 2SC2812N-L7-TB0
Q3301	405 014 4519	TR 2SC2412K T146 R
	405 014 4618	TR 2SC2412K T146 S
	405 015 8724	TR 2SC2812-L6-TB
	405 015 8922	TR 2SC2812-L7-TB
	405 163 1612	TR 2SC2812N-L6-TB0
	405 163 1711	TR 2SC2812N-L7-TB0
Q3302	405 014 4519	TR 2SC2412K T146 R
	405 014 4618	TR 2SC2412K T146 S
	405 015 8724	TR 2SC2812-L6-TB
	405 015 8922	TR 2SC2812-L7-TB
	405 163 1612	TR 2SC2812N-L6-TB0
	405 163 1711	TR 2SC2812N-L7-TB0
Q3591	405 002 8324	TR 2SA1203-Y-TE12L
Q3592	405 014 4519	TR 2SC2412K T146 R
	405 014 4618	TR 2SC2412K T146 S
	405 015 8724	TR 2SC2812-L6-TB
	405 015 8922	TR 2SC2812-L7-TB
	405 163 1612	TR 2SC2812N-L6-TB0
	405 163 1711	TR 2SC2812N-L7-TB0
Q4501	405 014 4519	TR 2SC2412K T146 R
	405 014 4618	TR 2SC2412K T146 S
	405 015 8724	TR 2SC2812-L6-TB
	405 015 8922	TR 2SC2812-L7-TB
	405 163 1612	TR 2SC2812N-L6-TB0
	405 163 1711	TR 2SC2812N-L7-TB0
Q4502	405 014 4519	TR 2SC2412K T146 R
	405 014 4618	TR 2SC2412K T146 S
	405 015 8724	TR 2SC2812-L6-TB
	405 015 8922	TR 2SC2812-L7-TB
	405 163 1612	TR 2SC2812N-L6-TB0
	405 163 1711	TR 2SC2812N-L7-TB0
Q4503	405 014 4519	TR 2SC2412K T146 R
	405 014 4618	TR 2SC2412K T146 S
	405 015 8724	TR 2SC2812-L6-TB
	405 015 8922	TR 2SC2812-L7-TB
	405 163 1612	TR 2SC2812N-L6-TB0
	405 163 1711	TR 2SC2812N-L7-TB0
Q4504	405 134 5925	TR 2SA1037AK-T146-R
	405 147 2215	TR 2SA1037AK-S-T146
	405 002 0318	TR 2SA1037K T146 R
	405 002 0417	TR 2SA1037K T146 S
	405 002 6726	TR 2SA1179-M6-TB
	405 002 6924	TR 2SA1179-M7-TB
	405 163 1513	TR 2SA1179N-M6-TB
	405 163 2718	TR 2SA1179N-M7-TB
Q4506	405 134 5925	TR 2SA1037AK-T146-R
	405 147 2215	TR 2SA1037AK-S-T146
	405 002 0318	TR 2SA1037K T146 R
	405 002 0417	TR 2SA1037K T146 S
	405 002 6726	TR 2SA1179-M6-TB
	405 002 6924	TR 2SA1179-M7-TB
	405 163 1513	TR 2SA1179N-M6-TB
	405 163 2718	TR 2SA1179N-M7-TB
Q4507	405 134 5925	TR 2SA1037AK-T146-R
	405 147 2215	TR 2SA1037AK-S-T146
	405 002 0318	TR 2SA1037K T146 R
	405 002 0417	TR 2SA1037K T146 S
	405 002 6726	TR 2SA1179-M6-TB
	405 002 6924	TR 2SA1179-M7-TB
	405 163 1513	TR 2SA1179N-M6-TB
	405 163 2718	TR 2SA1179N-M7-TB
Q4508	405 014 4519	TR 2SC2412K T146 R
	405 014 4618	TR 2SC2412K T146 S
	405 015 8724	TR 2SC2812-L6-TB
	405 015 8922	TR 2SC2812-L7-TB
	405 163 1612	TR 2SC2812N-L6-TB0
	405 163 1711	TR 2SC2812N-L7-TB0
Q4541	405 014 4519	TR 2SC2412K T146 R
	405 014 4618	TR 2SC2412K T146 S
	405 015 8724	TR 2SC2812-L6-TB
	405 015 8922	TR 2SC2812-L7-TB
	405 163 1612	TR 2SC2812N-L6-TB0
	405 163 1711	TR 2SC2812N-L7-TB0
Q4544	405 014 4519	TR 2SC2412K T146 R
	405 014 4618	TR 2SC2412K T146 S
	405 015 8724	TR 2SC2812-L6-TB
	405 015 8922	TR 2SC2812-L7-TB
	405 163 1612	TR 2SC2812N-L6-TB0
	405 163 1711	TR 2SC2812N-L7-TB0
Q4546	405 014 4519	TR 2SC2412K T146 R
	405 014 4618	TR 2SC2412K T146 S
	405 015 8724	TR 2SC2812-L6-TB
	405 015 8922	TR 2SC2812-L7-TB
	405 163 1612	TR 2SC2812N-L6-TB0
	405 163 1711	TR 2SC2812N-L7-TB0
Q4554	405 014 4519	TR 2SC2412K T146 R
	405 014 4618	TR 2SC2412K T146 S
	405 015 8724	TR 2SC2812-L6-TB
	405 015 8922	TR 2SC2812-L7-TB
	405 163 1612	TR 2SC2812N-L6-TB0
	405 163 1711	TR 2SC2812N-L7-TB0
Q4556	405 014 4519	TR 2SC2412K T146 R
	405 014 4618	TR 2SC2412K T146 S
	405 015 8724	TR 2SC2812-L6-TB
	405 015 8922	TR 2SC2812-L7-TB
	405 163 1612	TR 2SC2812N-L6-TB0
	405 163 1711	TR 2SC2812N-L7-TB0
Q4557	405 014 4519	TR 2SC2412K T146 R
	405 014 4618	TR 2SC2412K T146 S
	405 015 8724	TR 2SC2812-L6-TB
	405 015 8922	TR 2SC2812-L7-TB
	405 163 1612	TR 2SC2812N-L6-TB0
	405 163 1711	TR 2SC2812N-L7-TB0
Q4651	405 134 5925	TR 2SA1037AK-T146-R
	405 147 2215	TR 2SA1037AK-S-T146
	405 002 0318	TR 2SA1037K T146 R
	405 002 0417	TR 2SA1037K T146 S
	405 002 6726	TR 2SA1179-M6-TB
	405 002 6924	TR 2SA1179-M7-TB
	405 163 1513	TR 2SA1179N-M6-TB
	405 163 2718	TR 2SA1179N-M7-TB
Q4682	405 014 4519	TR 2SC2412K T146 R
	405 014 4618	TR 2SC2412K T146 S
	405 015 8724	TR 2SC2812-L6-TB
	405 015 8922	TR 2SC2812-L7-TB
	405 163 1612	TR 2SC2812N-L6-TB0
	405 163 1711	TR 2SC2812N-L7-TB0
Q4683	405 134 5925	TR 2SA1037AK-T146-R
	405 147 2215	TR 2SA1037AK-S-T146
	405 002 0318	TR 2SA1037K T146 R
	405 002 0417	TR 2SA1037K T146 S
	405 002 6726	TR 2SA1179-M6-TB
	405 002 6924	TR 2SA1179-M7-TB
	405 163 1513	TR 2SA1179N-M6-TB
	405 163 2718	TR 2SA1179N-M7-TB
Q4801	405 134 5925	TR 2SA1037AK-T146-R
	405 147 2215	TR 2SA1037AK-S-T146

Electrical Parts List

Key No.	Part No.	Description
	405 002 0318	TR 2SA1037K T146 R
	405 002 0417	TR 2SA1037K T146 S
	405 002 6726	TR 2SA1179-M6-TB
	405 002 6924	TR 2SA1179-M7-TB
	405 163 1513	TR 2SA1179N-M6-TB
	405 163 2718	TR 2SA1179N-M7-TB
Q4802	405 134 5925	TR 2SA1037AK-T146-R
	405 147 2215	TR 2SA1037AK-S-T146
	405 002 0318	TR 2SA1037K T146 R
	405 002 0417	TR 2SA1037K T146 S
	405 002 6726	TR 2SA1179-M6-TB
	405 002 6924	TR 2SA1179-M7-TB
	405 163 1513	TR 2SA1179N-M6-TB
	405 163 2718	TR 2SA1179N-M7-TB
Q4803	405 134 5925	TR 2SA1037AK-T146-R
	405 147 2215	TR 2SA1037AK-S-T146
	405 002 0318	TR 2SA1037K T146 R
	405 002 0417	TR 2SA1037K T146 S
	405 002 6726	TR 2SA1179-M6-TB
	405 002 6924	TR 2SA1179-M7-TB
	405 163 1513	TR 2SA1179N-M6-TB
	405 163 2718	TR 2SA1179N-M7-TB
Q4804	405 134 5925	TR 2SA1037AK-T146-R
	405 147 2215	TR 2SA1037AK-S-T146
	405 002 0318	TR 2SA1037K T146 R
	405 002 0417	TR 2SA1037K T146 S
	405 002 6726	TR 2SA1179-M6-TB
	405 002 6924	TR 2SA1179-M7-TB
	405 163 1513	TR 2SA1179N-M6-TB
	405 163 2718	TR 2SA1179N-M7-TB
Q4805	405 014 4519	TR 2SC2412K T146 R
	405 014 4618	TR 2SC2412K T146 S
	405 015 8724	TR 2SC2812-L6-TB
	405 015 8922	TR 2SC2812-L7-TB
	405 163 1612	TR 2SC2812N-L6-TB0
	405 163 1711	TR 2SC2812N-L7-TB0
Q4807	405 014 4519	TR 2SC2412K T146 R
	405 014 4618	TR 2SC2412K T146 S
	405 015 8724	TR 2SC2812-L6-TB
	405 015 8922	TR 2SC2812-L7-TB
	405 163 1612	TR 2SC2812N-L6-TB0
	405 163 1711	TR 2SC2812N-L7-TB0
Q4808	405 014 4519	TR 2SC2412K T146 R
	405 014 4618	TR 2SC2412K T146 S
	405 015 8724	TR 2SC2812-L6-TB
	405 015 8922	TR 2SC2812-L7-TB
	405 163 1612	TR 2SC2812N-L6-TB0
	405 163 1711	TR 2SC2812N-L7-TB0
Q5801	405 014 4519	TR 2SC2412K T146 R
	405 014 4618	TR 2SC2412K T146 S
	405 015 8724	TR 2SC2812-L6-TB
	405 015 8922	TR 2SC2812-L7-TB
	405 163 1612	TR 2SC2812N-L6-TB0
	405 163 1711	TR 2SC2812N-L7-TB0
Q5802	405 014 4519	TR 2SC2412K T146 R
	405 014 4618	TR 2SC2412K T146 S
	405 015 8724	TR 2SC2812-L6-TB
	405 015 8922	TR 2SC2812-L7-TB
	405 163 1612	TR 2SC2812N-L6-TB0
	405 163 1711	TR 2SC2812N-L7-TB0
Q7821	405 014 4519	TR 2SC2412K T146 R
	405 014 4618	TR 2SC2412K T146 S
	405 015 8724	TR 2SC2812-L6-TB
	405 015 8922	TR 2SC2812-L7-TB
	405 163 1612	TR 2SC2812N-L6-TB0
	405 163 1711	TR 2SC2812N-L7-TB0
Q7841	405 014 4519	TR 2SC2412K T146 R
	405 014 4618	TR 2SC2412K T146 S
	405 015 8724	TR 2SC2812-L6-TB
	405 015 8922	TR 2SC2812-L7-TB
	405 163 1612	TR 2SC2812N-L6-TB0
	405 163 1711	TR 2SC2812N-L7-TB0
Q7861	405 014 4519	TR 2SC2412K T146 R
	405 014 4618	TR 2SC2412K T146 S
	405 015 8724	TR 2SC2812-L6-TB
	405 015 8922	TR 2SC2812-L7-TB
	405 163 1612	TR 2SC2812N-L6-TB0
	405 163 1711	TR 2SC2812N-L7-TB0
Q7881	405 014 4519	TR 2SC2412K T146 R
	405 014 4618	TR 2SC2412K T146 S
	405 015 8724	TR 2SC2812-L6-TB
	405 015 8922	TR 2SC2812-L7-TB
	405 163 1612	TR 2SC2812N-L6-TB0
	405 163 1711	TR 2SC2812N-L7-TB0
Q7921	405 014 4519	TR 2SC2412K T146 R
	405 014 4618	TR 2SC2412K T146 S
	405 015 8724	TR 2SC2812-L6-TB
	405 015 8922	TR 2SC2812-L7-TB
	405 163 1612	TR 2SC2812N-L6-TB0
	405 163 1711	TR 2SC2812N-L7-TB0
Q8036	405 045 8725	TR 2SK536-TB
Q8037	405 045 8725	TR 2SK536-TB
Q8038	405 014 4519	TR 2SC2412K T146 R
	405 014 4618	TR 2SC2412K T146 S
	405 015 8724	TR 2SC2812-L6-TB
	405 015 8922	TR 2SC2812-L7-TB
	405 163 1612	TR 2SC2812N-L6-TB0
	405 163 1711	TR 2SC2812N-L7-TB0
Q8039	405 014 4519	TR 2SC2412K T146 R
	405 014 4618	TR 2SC2412K T146 S
	405 015 8724	TR 2SC2812-L6-TB
	405 015 8922	TR 2SC2812-L7-TB
	405 163 1612	TR 2SC2812N-L6-TB0
	405 163 1711	TR 2SC2812N-L7-TB0
Q8041	405 014 4519	TR 2SC2412K T146 R
	405 014 4618	TR 2SC2412K T146 S
	405 015 8724	TR 2SC2812-L6-TB
	405 015 8922	TR 2SC2812-L7-TB
	405 163 1612	TR 2SC2812N-L6-TB0
	405 163 1711	TR 2SC2812N-L7-TB0
Q8042	405 045 8725	TR 2SK536-TB
Q9801	405 134 5925	TR 2SA1037AK-T146-R
	405 147 2215	TR 2SA1037AK-S-T146
	405 002 0318	TR 2SA1037K T146 R
	405 002 0417	TR 2SA1037K T146 S
	405 002 6726	TR 2SA1179-M6-TB
	405 002 6924	TR 2SA1179-M7-TB
	405 163 1513	TR 2SA1179N-M6-TB
	405 163 2718	TR 2SA1179N-M7-TB
Q9802	405 014 4519	TR 2SC2412K T146 R
	405 014 4618	TR 2SC2412K T146 S
	405 015 8724	TR 2SC2812-L6-TB
	405 015 8922	TR 2SC2812-L7-TB
	405 163 1612	TR 2SC2812N-L6-TB0
	405 163 1711	TR 2SC2812N-L7-TB0
INTEGRATED CIRCUIT		
IC1101	409 515 9813	IC UPD64083GF-3BA
IC1102	409 416 6416	IC BA033FP-E2
	409 410 1011	IC UPC2933T-E1
IC1141	409 434 8119	IC TC4053BFT-(EL)
IC1161	409 499 1711	IC PQ025EZ01ZP
	409 461 7720	IC PQ2TZ15
IC1351	409 534 1713	IC SI-3025LSA-TL
IC141	410 300 4804	IC MM1031XM

Electrical Parts List

Key No.	Part No.	Description
IC1560	409 051 2930	IC TC4053BF(EL)
IC1621	409 390 0011	IC LM7171AIMX
	409 486 7719	IC LM7171BIMX
IC1631	409 343 0221	IC LT1206CS8
IC1801	409 605 4612	IC M66501FP
IC1802	410 364 6905	IC TC74ACT138FT-EL
IC1803	410 364 6905	IC TC74ACT138FT-EL
IC1851	409 359 1110	IC TC7W240FU-TE12L
IC1871	409 481 8612	IC LM76CHMX-5
IC1872	409 481 8612	IC LM76CHMX-5
IC1881	409 301 5319	IC TC7S32FU-TE85L
IC201	409 470 2614	IC AD8183ARU-REEL7
IC2101	409 504 5017	IC TC90A69F
IC212	409 458 3411	IC M62393FP
IC231	409 520 4315	IC AD9888KS-140
	410 494 2303	IC AD9888KS-140-308
IC2311	410 429 8202	IC MB40C348VPFV
IC234	409 416 6416	IC BA033FP-E2
	409 410 1011	IC UPC2933T-E1
IC2341	409 357 6622	IC LT1260CS
IC235	409 416 6416	IC BA033FP-E2
	409 410 1011	IC UPC2933T-E1
IC2351	409 416 6416	IC BA033FP-E2
	409 410 1011	IC UPC2933T-E1
IC2353	409 416 6416	IC BA033FP-E2
	409 410 1011	IC UPC2933T-E1
IC236	409 416 6416	IC BA033FP-E2
	409 410 1011	IC UPC2933T-E1
IC2401	409 251 0320	IC TC7W04F-(TE12L)
IC2402	410 471 2906	IC TC74HC4040AF(EL)
IC2403	409 327 6710	IC TC7W02FU-TE12L
IC2404	409 301 5517	IC TC7S08FU(TE85L)
IC301	409 501 8318	IC PW365-10U
IC304	409 339 3615	IC 24LC16BT/SN-T
IC306	409 301 5319	IC TC7S32FU-TE85L
IC3101	409 504 9025	IC TB1274AF
IC3102	409 416 6515	IC BA05FP-E2
IC3103	409 416 6515	IC BA05FP-E2
IC3211	410 321 8300	IC TC74VCX16244FT
IC3212	410 321 8300	IC TC74VCX16244FT
IC3213	410 321 8300	IC TC74VCX16244FT
IC3214	410 362 6501	IC TC74LCX541FT
IC3224	410 362 6501	IC TC74LCX541FT
IC3251	410 362 6501	IC TC74LCX541FT
IC341	410 530 3707	IC IC61LV6416-15TG
IC351	410 545 0302	IC MBM29LV800TA90-0600
IC3581	409 539 8915	IC PQ033EZ01ZP
IC361	409 501 9117	IC ICS512MT
IC362	409 501 9117	IC ICS512MT
IC391	409 416 6416	IC BA033FP-E2
	409 410 1011	IC UPC2933T-E1
IC392	409 534 1713	IC SI-3025LSA-TL
IC401	409 554 1311	IC L3E07070K0A
IC4201	410 426 8106	IC TC240C4FTB-C006(O)
IC4231	409 444 8710	IC ICS1523M-ER
IC4251	410 401 7506	IC TC74VCX16374FT
IC4261	410 401 7506	IC TC74VCX16374FT
IC4271	410 401 7506	IC TC74VCX16374FT
IC4281	410 362 6501	IC TC74LCX541FT
IC4501	409 545 7424	IC NJM1496V
IC4502	410 337 0503	IC TC74LCX14FT
IC4503	409 323 8926	IC TC4W53FU(TE12L)
IC4521	409 461 7314	IC AD8057ART-REEL7
IC4531	409 434 8119	IC TC4053BFT-(EL)
IC4541	410 348 7409	IC TC74LCX125FT(EL)
IC4551	409 461 7314	IC AD8057ART-REEL7
IC4552	409 461 7314	IC AD8057ART-REEL7
IC4553	409 461 7314	IC AD8057ART-REEL7
IC4801	409 416 6416	IC BA033FP-E2
	409 410 1011	IC UPC2933T-E1
IC481	409 499 1810	IC PQ018EZ01ZP
IC4811	410 325 4605	IC TC74LCX244FT
	410 325 4704	IC HD74LVC244AT
IC4821	410 325 4605	IC TC74LCX244FT
	410 325 4704	IC HD74LVC244AT
IC4831	410 365 5600	IC SN74LVCC4245APWR
IC4841	410 365 5600	IC SN74LVCC4245APWR
IC4851	410 325 4605	IC TC74LCX244FT
	410 325 4704	IC HD74LVC244AT
IC4861	410 325 4605	IC TC74LCX244FT
	410 325 4704	IC HD74LVC244AT
IC4891	409 404 7210	IC TC7SET00FU-(TE85L)
IC5501	409 428 9610	IC M62399FP
IC5531	409 428 9610	IC M62399FP
IC5551	409 246 9717	IC LA6358NM-TE-L
IC5801	410 362 6600	IC TC74ACT541FT
IC5831	410 362 6600	IC TC74ACT541FT
IC5861	410 362 6600	IC TC74ACT541FT
IC5881	410 362 6600	IC TC74ACT541FT
IC6301	410 365 4603	IC MS82V16520-8AGA
	410 462 7408	IC MS82V16520A-8
IC6302	410 365 4603	IC MS82V16520-8AGA
	410 462 7408	IC MS82V16520A-8
IC6303	410 365 4603	IC MS82V16520-8AGA
	410 462 7408	IC MS82V16520A-8
IC6304	410 365 4603	IC MS82V16520-8AGA
	410 462 7408	IC MS82V16520A-8
IC7209	409 422 5727	IC MC74HC08ADT
IC7210	409 301 5319	IC TC7S32FU-TE85L
IC7801	409 428 9610	IC M62399FP
IC7811	409 152 5414	IC TC7S08F-TE85L
IC7821	409 461 7829	IC PQ20WZ11
IC7841	409 461 7829	IC PQ20WZ11
IC7843	409 301 5319	IC TC7S32FU-TE85L
IC7861	409 461 7829	IC PQ20WZ11
IC7881	409 461 7829	IC PQ20WZ11
IC801	410 484 2009	IC HD64F7045F28-C291
IC802	409 344 1920	IC MN1382-Q-TX
IC803	410 560 3005	IC MBM29F160BE-90-0566A
IC8031	409 416 6416	IC BA033FP-E2
	409 410 1011	IC UPC2933T-E1
IC804	410 473 9200	IC CY7C1041B-15ZC
IC805	409 438 5619	IC TC74ACT08FT
IC8071	410 517 6806	IC TC74LVX4053FT
IC808	409 339 3615	IC 24LC16BT/SN-T
IC8081	409 487 5813	IC 24C01CT/SN
IC8091	409 558 7210	IC 24C02CT-I/SN
IC8092	410 517 6806	IC TC74LVX4053FT
IC811	409 155 8016	IC TC7S04F-TE85L
IC812	410 325 4605	IC TC74LCX244FT
	410 325 4704	IC HD74LVC244AT
IC813	409 152 5414	IC TC7S08F-TE85L
IC814	410 362 6501	IC TC74LCX541FT
IC815	410 362 6501	IC TC74LCX541FT
IC816	410 362 6600	IC TC74ACT541FT
IC8611	409 534 1713	IC SI-3025LSA-TL
IC9401	409 511 2016	IC JS1110074
IC9402	410 457 4207	IC EM638325TS-6
	410 535 6802	IC IC42S32200-7T
IC9405	409 506 0416	IC M62392FP
IC9451	410 325 4605	IC TC74LCX244FT
	410 325 4704	IC HD74LVC244AT
IC9501	410 468 8706	IC UPD65943GC-100-7EA
IC9801	409 468 8918	IC ML60851CTB

Electrical Parts List

Key No.	Part No.	Description
	409 521 4512	IC ML60851DTB
IC9822	409 336 3222	IC TC7SH02FU(TE85L)
IC9851	409 418 8616	IC M66230FP-200D
IC9882	410 356 8009	IC SN74LV14APWR
IC9883	410 471 3002	IC TC74VHC574FT
IC9884	409 418 8616	IC M66230FP-200D
IC9931	409 404 6322	IC M62320FP
CAPACITOR		
C1101	403 164 0234	CERAMIC 0.1U Z 25V
C1102	403 164 0234	CERAMIC 0.1U Z 25V
C1103	403 164 0234	CERAMIC 0.1U Z 25V
C1105	403 397 6212	ELECT 10U M 16V
C1106	403 164 0234	CERAMIC 0.1U Z 25V
C1107	403 164 0234	CERAMIC 0.1U Z 25V
C1108	403 164 0234	CERAMIC 0.1U Z 25V
C1109	403 164 0234	CERAMIC 0.1U Z 25V
C1111	403 397 6212	ELECT 10U M 16V
C1112	403 164 0234	CERAMIC 0.1U Z 25V
C1113	403 164 0234	CERAMIC 0.1U Z 25V
C1114	403 164 0234	CERAMIC 0.1U Z 25V
C1115	403 394 9315	ELECT 220U M 6.3V
C1116	403 397 6311	ELECT 22U M 16V
C1117	403 164 0234	CERAMIC 0.1U Z 25V
C1118	403 323 1311	CERAMIC 0.47U Z 10V
C1119	403 164 0234	CERAMIC 0.1U Z 25V
C1121	403 323 1311	CERAMIC 0.47U Z 10V
C1122	403 392 1212	ELECT 47U M 6.3V
C1123	403 145 9915	CERAMIC 22P J 50V
C1124	403 145 9915	CERAMIC 22P J 50V
C1125	403 394 1319	ELECT 100U M 6.3V
C1126	403 164 0234	CERAMIC 0.1U Z 25V
C1127	403 155 1312	CERAMIC 150P J 50V
C1128	403 155 1312	CERAMIC 150P J 50V
C1129	403 215 2211	CERAMIC 0.01U K 50V
C1131	403 394 1319	ELECT 100U M 6.3V
C1132	403 164 0234	CERAMIC 0.1U Z 25V
C1133	403 397 6212	ELECT 10U M 16V
C1134	403 164 0234	CERAMIC 0.1U Z 25V
C1135	403 394 9315	ELECT 220U M 6.3V
C1136	403 394 9315	ELECT 220U M 6.3V
C1137	403 323 1311	CERAMIC 0.47U Z 10V
C1141	403 164 0234	CERAMIC 0.1U Z 25V
C1142	403 149 9248	CERAMIC 0.01U Z 50V
C1143	403 398 4118	ELECT 47U M 16V
C1144	403 164 0234	CERAMIC 0.1U Z 25V
C1145	403 397 6212	ELECT 10U M 16V
C1146	403 283 6339	CERAMIC 1U Z 10V
C1148	403 164 0234	CERAMIC 0.1U Z 25V
C1162	403 139 7316	CERAMIC 18P J 50V
C1163	403 157 3116	CERAMIC 56P J 50V
C1165	403 266 8118	NP-ELECT 1U M 50V
C1351	403 394 1319	ELECT 100U M 6.3V
C1352	403 164 0234	CERAMIC 0.1U Z 25V
C1353	403 394 1319	ELECT 100U M 6.3V
C1354	403 164 0234	CERAMIC 0.1U Z 25V
C141	403 398 6112	ELECT 1U M 50V
C142	403 175 4812	NP-ELECT 10U M 10V
C143	403 164 0234	CERAMIC 0.1U Z 25V
C144	403 397 6212	ELECT 10U M 16V
C145	403 283 6339	CERAMIC 1U Z 10V
C146	403 164 0234	CERAMIC 0.1U Z 25V
C147	403 398 4118	ELECT 47U M 16V
C150	403 398 4118	ELECT 47U M 16V
C1501	403 164 0234	CERAMIC 0.1U Z 25V
C1502	403 164 0234	CERAMIC 0.1U Z 25V
C1507	403 164 0234	CERAMIC 0.1U Z 25V
C151	403 283 6339	CERAMIC 1U Z 10V
C1511	403 392 1212	ELECT 47U M 6.3V
C1512	403 164 0234	CERAMIC 0.1U Z 25V
C1513	403 164 0234	CERAMIC 0.1U Z 25V
C1514	403 164 0234	CERAMIC 0.1U Z 25V
C152	403 397 6915	ELECT 1U M 50V
C1521	403 164 0234	CERAMIC 0.1U Z 25V
C1522	403 164 0234	CERAMIC 0.1U Z 25V
C1523	403 164 0234	CERAMIC 0.1U Z 25V
C1524	403 164 0234	CERAMIC 0.1U Z 25V
C1525	403 164 0234	CERAMIC 0.1U Z 25V
C1526	403 164 0234	CERAMIC 0.1U Z 25V
C1527	403 164 0234	CERAMIC 0.1U Z 25V
C1531	403 391 5112	ELECT 100U M 16V
C1532	403 164 0234	CERAMIC 0.1U Z 25V
C1533	403 164 0234	CERAMIC 0.1U Z 25V
C1534	403 164 0234	CERAMIC 0.1U Z 25V
C1536	403 164 0234	CERAMIC 0.1U Z 25V
C1537	403 164 0234	CERAMIC 0.1U Z 25V
C1538	403 164 0234	CERAMIC 0.1U Z 25V
C1539	403 164 0234	CERAMIC 0.1U Z 25V
C1601	403 215 2211	CERAMIC 0.01U K 50V
C1602	403 215 2211	CERAMIC 0.01U K 50V
C1603	403 215 2211	CERAMIC 0.01U K 50V
C1611	403 157 6711	CERAMIC 560P K 50V
C1616	403 157 6711	CERAMIC 560P K 50V
C1621	403 164 0234	CERAMIC 0.1U Z 25V
C1622	403 391 5112	ELECT 100U M 16V
C1623	403 157 3611	CERAMIC 100P J 50V
C1631	403 391 5112	ELECT 100U M 16V
C1632	403 164 0234	CERAMIC 0.1U Z 25V
C1633	403 157 3611	CERAMIC 100P J 50V
C1634	403 149 9248	CERAMIC 0.01U Z 50V
C165	403 113 3835	CERAMIC 1000P K 50V
C1801	403 164 0234	CERAMIC 0.1U Z 25V
C1802	403 164 0234	CERAMIC 0.1U Z 25V
C1803	403 164 0234	CERAMIC 0.1U Z 25V
C1804	403 394 1319	ELECT 100U M 6.3V
C1851	403 164 0234	CERAMIC 0.1U Z 25V
C1861	403 164 0234	CERAMIC 0.1U Z 25V
C1862	403 164 0234	CERAMIC 0.1U Z 25V
C1871	403 164 0234	CERAMIC 0.1U Z 25V
C1872	403 164 0234	CERAMIC 0.1U Z 25V
C1874	403 155 1619	CERAMIC 33P J 50V
C1875	403 155 1619	CERAMIC 33P J 50V
C1876	403 155 1619	CERAMIC 33P J 50V
C1877	403 155 1619	CERAMIC 33P J 50V
C201	403 164 0234	CERAMIC 0.1U Z 25V
C202	403 164 0234	CERAMIC 0.1U Z 25V
C206	403 164 0234	CERAMIC 0.1U Z 25V
C207	403 394 9315	ELECT 220U M 6.3V
C208	403 149 9248	CERAMIC 0.01U Z 50V
C209	403 164 0234	CERAMIC 0.1U Z 25V
C210	403 394 9315	ELECT 220U M 6.3V
C2101	403 149 9248	CERAMIC 0.01U Z 50V
C2102	403 149 9248	CERAMIC 0.01U Z 50V
C2103	403 394 1319	ELECT 100U M 6.3V
C2104	403 164 0234	CERAMIC 0.1U Z 25V
C2106	403 149 9248	CERAMIC 0.01U Z 50V
C2107	403 149 9248	CERAMIC 0.01U Z 50V
C2108	403 266 8118	NP-ELECT 1U M 50V
C211	403 164 0234	CERAMIC 0.1U Z 25V
C2111	403 392 1212	ELECT 47U M 6.3V
C2112	403 164 0234	CERAMIC 0.1U Z 25V
C2113	403 392 1212	ELECT 47U M 6.3V
C2114	403 164 0234	CERAMIC 0.1U Z 25V
C2115	403 341 3915	POS-SOLID 100U M 6.3V
C2116	403 164 0234	CERAMIC 0.1U Z 25V

Electrical Parts List

Key No.	Part No.	Description			
C2117	403 392 1212	ELECT	47U	M	6.3V
C2118	403 164 0234	CERAMIC	0.1U	Z	25V
C2119	403 164 0234	CERAMIC	0.1U	Z	25V
C2121	403 265 3312	CERAMIC	680P	J	50V
C2122	403 149 9248	CERAMIC	0.01U	Z	50V
C2123	403 149 9248	CERAMIC	0.01U	Z	50V
C2127	403 164 0234	CERAMIC	0.1U	Z	25V
C213	403 157 2515	CERAMIC	27P	J	50V
C217	403 157 2515	CERAMIC	27P	J	50V
C219	403 157 2515	CERAMIC	27P	J	50V
C227	403 394 9315	ELECT	220U	M	6.3V
C228	403 283 6339	CERAMIC	1U	Z	10V
C229	403 394 9315	ELECT	220U	M	6.3V
C230	403 283 6339	CERAMIC	1U	Z	10V
C2307	403 267 0814	NP-ELECT	47U	M	6.3V
C2308	403 267 0814	NP-ELECT	47U	M	6.3V
C2309	403 267 0814	NP-ELECT	47U	M	6.3V
C2314	403 164 0234	CERAMIC	0.1U	Z	25V
C2315	403 164 0234	CERAMIC	0.1U	Z	25V
C2316	403 283 6339	CERAMIC	1U	Z	10V
C2317	403 283 6339	CERAMIC	1U	Z	10V
C2318	403 283 6339	CERAMIC	1U	Z	10V
C2319	403 283 6339	CERAMIC	1U	Z	10V
C2324	403 283 6339	CERAMIC	1U	Z	10V
C2325	403 283 6339	CERAMIC	1U	Z	10V
C2326	403 397 5413	ELECT	470U	M	4V
C2327	403 283 6339	CERAMIC	1U	Z	10V
C2328	403 283 6339	CERAMIC	1U	Z	10V
C2329	403 283 6339	CERAMIC	1U	Z	10V
C2331	403 283 6339	CERAMIC	1U	Z	10V
C2332	403 397 5413	ELECT	470U	M	4V
C2333	403 283 6339	CERAMIC	1U	Z	10V
C2334	403 283 6339	CERAMIC	1U	Z	10V
C2335	403 283 6339	CERAMIC	1U	Z	10V
C2336	403 283 6339	CERAMIC	1U	Z	10V
C2337	403 283 6339	CERAMIC	1U	Z	10V
C2338	403 283 6339	CERAMIC	1U	Z	10V
C2339	403 164 0234	CERAMIC	0.1U	Z	25V
C234	403 164 0234	CERAMIC	0.1U	Z	25V
C2341	403 298 9619	CERAMIC	0.1U	K	16V
	403 325 3313	CERAMIC	0.1U	K	16V
C2342	403 113 3835	CERAMIC	1000P	K	50V
C2343	403 283 6339	CERAMIC	1U	Z	10V
C2344	403 283 6339	CERAMIC	1U	Z	10V
C2346	403 164 0234	CERAMIC	0.1U	Z	25V
C2347	403 164 0234	CERAMIC	0.1U	Z	25V
C2348	403 394 1319	ELECT	100U	M	6.3V
C2349	403 283 6339	CERAMIC	1U	Z	10V
C235	403 394 9315	ELECT	220U	M	6.3V
C2353	403 265 3213	CERAMIC	1000P	J	50V
C2354	403 164 0234	CERAMIC	0.1U	Z	25V
C2356	403 164 0234	CERAMIC	0.1U	Z	25V
C2357	403 394 1319	ELECT	100U	M	6.3V
C2358	403 283 6339	CERAMIC	1U	Z	10V
C2359	403 283 6339	CERAMIC	1U	Z	10V
C236	403 398 3814	ELECT	220U	M	16V
C2360	403 164 0234	CERAMIC	0.1U	Z	25V
C2361	403 164 0234	CERAMIC	0.1U	Z	25V
C2362	403 164 0234	CERAMIC	0.1U	Z	25V
C2363	403 164 0234	CERAMIC	0.1U	Z	25V
C2364	403 394 1319	ELECT	100U	M	6.3V
C2365	403 283 6339	CERAMIC	1U	Z	10V
C2366	403 397 5710	ELECT	100U	M	10V
C2367	403 164 0234	CERAMIC	0.1U	Z	25V
C2368	403 283 6339	CERAMIC	1U	Z	10V
C2369	403 283 6339	CERAMIC	1U	Z	10V
C237	403 164 0234	CERAMIC	0.1U	Z	25V

Key No.	Part No.	Description			
C2371	403 283 6339	CERAMIC	1U	Z	10V
C2372	403 283 6339	CERAMIC	1U	Z	10V
C2373	403 283 6339	CERAMIC	1U	Z	10V
C2381	403 283 6339	CERAMIC	1U	Z	10V
C2382	403 283 6339	CERAMIC	1U	Z	10V
C2383	403 394 1319	ELECT	100U	M	6.3V
C2384	403 113 3835	CERAMIC	1000P	K	50V
C239	403 164 0234	CERAMIC	0.1U	Z	25V
C241	403 357 7112	OS-SOLID	47U	M	10V
C2419	403 164 0234	CERAMIC	0.1U	Z	25V
C242	403 164 0234	CERAMIC	0.1U	Z	25V
C243	403 164 0234	CERAMIC	0.1U	Z	25V
C244	403 205 2818	CERAMIC	0.047U	K	25V
C245	403 283 6339	CERAMIC	1U	Z	10V
C247	403 164 0234	CERAMIC	0.1U	Z	25V
C248	403 164 0234	CERAMIC	0.1U	Z	25V
C249	403 283 6339	CERAMIC	1U	Z	10V
C2501	403 164 0234	CERAMIC	0.1U	Z	25V
C2502	403 164 0234	CERAMIC	0.1U	Z	25V
C2507	403 164 0234	CERAMIC	0.1U	Z	25V
C251	403 164 0234	CERAMIC	0.1U	Z	25V
C2511	403 392 1212	ELECT	47U	M	6.3V
C2512	403 164 0234	CERAMIC	0.1U	Z	25V
C2513	403 164 0234	CERAMIC	0.1U	Z	25V
C2514	403 164 0234	CERAMIC	0.1U	Z	25V
C252	403 205 2818	CERAMIC	0.047U	K	25V
C2521	403 164 0234	CERAMIC	0.1U	Z	25V
C2522	403 164 0234	CERAMIC	0.1U	Z	25V
C2523	403 164 0234	CERAMIC	0.1U	Z	25V
C2524	403 164 0234	CERAMIC	0.1U	Z	25V
C2525	403 164 0234	CERAMIC	0.1U	Z	25V
C2526	403 164 0234	CERAMIC	0.1U	Z	25V
C2527	403 164 0234	CERAMIC	0.1U	Z	25V
C253	403 283 6339	CERAMIC	1U	Z	10V
C2531	403 391 5112	ELECT	100U	M	16V
C2532	403 164 0234	CERAMIC	0.1U	Z	25V
C2533	403 164 0234	CERAMIC	0.1U	Z	25V
C2534	403 164 0234	CERAMIC	0.1U	Z	25V
C2536	403 164 0234	CERAMIC	0.1U	Z	25V
C2537	403 164 0234	CERAMIC	0.1U	Z	25V
C2538	403 164 0234	CERAMIC	0.1U	Z	25V
C2539	403 164 0234	CERAMIC	0.1U	Z	25V
C256	403 164 0234	CERAMIC	0.1U	Z	25V
C257	403 283 6339	CERAMIC	1U	Z	10V
C259	403 205 2818	CERAMIC	0.047U	K	25V
C261	403 283 6339	CERAMIC	1U	Z	10V
C262	403 164 0234	CERAMIC	0.1U	Z	25V
C263	403 283 6339	CERAMIC	1U	Z	10V
C264	403 283 6339	CERAMIC	1U	Z	10V
C266	403 283 6339	CERAMIC	1U	Z	10V
C267	403 283 6339	CERAMIC	1U	Z	10V
C268	403 283 6339	CERAMIC	1U	Z	10V
C269	403 283 6339	CERAMIC	1U	Z	10V
C271	403 283 6339	CERAMIC	1U	Z	10V
C272	403 157 7213	CERAMIC	3900P	K	50V
C273	403 338 0118	CERAMIC	0.039U	K	25V
C274	403 283 6339	CERAMIC	1U	Z	10V
C276	403 283 6339	CERAMIC	1U	Z	10V
C277	403 283 6339	CERAMIC	1U	Z	10V
C278	403 283 6339	CERAMIC	1U	Z	10V
C279	403 283 6339	CERAMIC	1U	Z	10V
C281	403 283 6339	CERAMIC	1U	Z	10V
C282	403 283 6339	CERAMIC	1U	Z	10V
C283	403 283 6339	CERAMIC	1U	Z	10V
C285	403 164 0234	CERAMIC	0.1U	Z	25V
C286	403 164 0234	CERAMIC	0.1U	Z	25V
C287	403 394 1319	ELECT	100U	M	6.3V

Electrical Parts List

Key No.	Part No.	Description			
C289	403 164 0234	CERAMIC	0.1U	Z	25V
C291	403 164 0234	CERAMIC	0.1U	Z	25V
C292	403 394 1319	ELECT	100U	M	6.3V
C293	403 164 0234	CERAMIC	0.1U	Z	25V
C294	403 164 0234	CERAMIC	0.1U	Z	25V
C296	403 394 1319	ELECT	100U	M	6.3V
C301	403 164 0234	CERAMIC	0.1U	Z	25V
C302	403 394 1319	ELECT	100U	M	6.3V
C303	403 394 1319	ELECT	100U	M	6.3V
C304	403 164 0234	CERAMIC	0.1U	Z	25V
C305	403 394 1319	ELECT	100U	M	6.3V
C306	403 394 1319	ELECT	100U	M	6.3V
C307	403 164 0234	CERAMIC	0.1U	Z	25V
C308	403 164 0234	CERAMIC	0.1U	Z	25V
C309	403 164 0234	CERAMIC	0.1U	Z	25V
C3101	403 164 0234	CERAMIC	0.1U	Z	25V
C3102	403 164 0234	CERAMIC	0.1U	Z	25V
C3103	403 164 0234	CERAMIC	0.1U	Z	25V
C3104	403 149 9248	CERAMIC	0.01U	Z	50V
C3106	403 392 1212	ELECT	47U	M	6.3V
C3107	403 343 8819	CERAMIC	0.47U	Z	16V
C3108	403 392 1212	ELECT	47U	M	6.3V
C3109	403 343 8819	CERAMIC	0.47U	Z	16V
C311	403 164 0234	CERAMIC	0.1U	Z	25V
C3111	403 164 0234	CERAMIC	0.1U	Z	25V
C3112	403 164 0234	CERAMIC	0.1U	Z	25V
C3113	403 164 0234	CERAMIC	0.1U	Z	25V
C3114	403 391 5716	ELECT	4.7U	M	25V
C3116	403 392 1212	ELECT	47U	M	6.3V
C3117	403 164 0234	CERAMIC	0.1U	Z	25V
C3118	403 164 0234	CERAMIC	0.1U	Z	25V
C3119	403 392 1212	ELECT	47U	M	6.3V
C312	403 164 0234	CERAMIC	0.1U	Z	25V
C3121	403 157 1815	CERAMIC	9P	D	50V
C3122	403 164 0234	CERAMIC	0.1U	Z	25V
C3123	403 149 9248	CERAMIC	0.01U	Z	50V
C3124	403 398 6013	ELECT	0.47U	M	50V
C3126	403 164 0234	CERAMIC	0.1U	Z	25V
C3127	403 149 9248	CERAMIC	0.01U	Z	50V
C3128	403 164 0234	CERAMIC	0.1U	Z	25V
C3129	403 164 0234	CERAMIC	0.1U	Z	25V
C313	403 164 0234	CERAMIC	0.1U	Z	25V
C3131	403 284 4314	CERAMIC	0.022U	K	50V
C3132	403 398 6518	ELECT	2.2U	M	50V
C3133	403 113 3835	CERAMIC	1000P	K	50V
C3134	403 157 2911	CERAMIC	47P	J	50V
C3135	403 394 9315	ELECT	220U	M	6.3V
C3136	403 164 0234	CERAMIC	0.1U	Z	25V
C3137	403 164 0234	CERAMIC	0.1U	Z	25V
C3138	403 341 3915	POS-SOLID	100U	M	6.3V
C315	403 164 0234	CERAMIC	0.1U	Z	25V
C3151	403 164 0234	CERAMIC	0.1U	Z	25V
C3152	403 164 0234	CERAMIC	0.1U	Z	25V
C3153	403 164 0234	CERAMIC	0.1U	Z	25V
C3154	403 283 6339	CERAMIC	1U	Z	10V
C3156	403 164 0234	CERAMIC	0.1U	Z	25V
C3157	403 145 9915	CERAMIC	22P	J	50V
C3158	403 145 9915	CERAMIC	22P	J	50V
C3159	403 157 1914	CERAMIC	10P	D	50V
C316	403 164 0234	CERAMIC	0.1U	Z	25V
C3161	403 157 2911	CERAMIC	47P	J	50V
C3162	403 157 3611	CERAMIC	100P	J	50V
C3163	403 157 2911	CERAMIC	47P	J	50V
C3164	403 157 3611	CERAMIC	100P	J	50V
C3166	403 145 9915	CERAMIC	22P	J	50V
C3167	403 157 2515	CERAMIC	27P	J	50V
C317	403 164 0234	CERAMIC	0.1U	Z	25V

Key No.	Part No.	Description			
C318	403 164 0234	CERAMIC	0.1U	Z	25V
C319	403 164 0234	CERAMIC	0.1U	Z	25V
C321	403 164 0234	CERAMIC	0.1U	Z	25V
C3210	403 394 1319	ELECT	100U	M	6.3V
C3211	403 164 0234	CERAMIC	0.1U	Z	25V
C3212	403 164 0234	CERAMIC	0.1U	Z	25V
C3213	403 164 0234	CERAMIC	0.1U	Z	25V
C3214	403 164 0234	CERAMIC	0.1U	Z	25V
C3215	403 164 0234	CERAMIC	0.1U	Z	25V
C3216	403 164 0234	CERAMIC	0.1U	Z	25V
C3217	403 164 0234	CERAMIC	0.1U	Z	25V
C3218	403 164 0234	CERAMIC	0.1U	Z	25V
C322	403 164 0234	CERAMIC	0.1U	Z	25V
C3227	403 164 0234	CERAMIC	0.1U	Z	25V
C3228	403 164 0234	CERAMIC	0.1U	Z	25V
C3229	403 149 9248	CERAMIC	0.01U	Z	50V
C323	403 164 0234	CERAMIC	0.1U	Z	25V
C3232	403 392 1212	ELECT	47U	M	6.3V
C324	403 164 0234	CERAMIC	0.1U	Z	25V
C3257	403 164 0234	CERAMIC	0.1U	Z	25V
C3258	403 164 0234	CERAMIC	0.1U	Z	25V
C3259	403 149 9248	CERAMIC	0.01U	Z	50V
C326	403 149 9248	CERAMIC	0.01U	Z	50V
C3262	403 392 1212	ELECT	47U	M	6.3V
C329	403 164 0234	CERAMIC	0.1U	Z	25V
C331	403 164 0234	CERAMIC	0.1U	Z	25V
C332	403 164 0234	CERAMIC	0.1U	Z	25V
C333	403 164 0234	CERAMIC	0.1U	Z	25V
C334	403 164 0234	CERAMIC	0.1U	Z	25V
C336	403 164 0234	CERAMIC	0.1U	Z	25V
C337	403 164 0234	CERAMIC	0.1U	Z	25V
C338	403 164 0234	CERAMIC	0.1U	Z	25V
C339	403 164 0234	CERAMIC	0.1U	Z	25V
C341	403 392 1212	ELECT	47U	M	6.3V
C342	403 164 0234	CERAMIC	0.1U	Z	25V
C343	403 164 0234	CERAMIC	0.1U	Z	25V
C344	403 164 0234	CERAMIC	0.1U	Z	25V
C346	403 164 0234	CERAMIC	0.1U	Z	25V
C347	403 164 0234	CERAMIC	0.1U	Z	25V
C3501	403 391 5112	ELECT	100U	M	16V
C3502	403 164 0234	CERAMIC	0.1U	Z	25V
C3503	403 164 0234	CERAMIC	0.1U	Z	25V
C3504	403 164 0234	CERAMIC	0.1U	Z	25V
C3505	403 164 0234	CERAMIC	0.1U	Z	25V
C3506	403 164 0234	CERAMIC	0.1U	Z	25V
C3507	403 391 5112	ELECT	100U	M	16V
C3508	403 164 0234	CERAMIC	0.1U	Z	25V
C351	403 392 1212	ELECT	47U	M	6.3V
C352	403 164 0234	CERAMIC	0.1U	Z	25V
C3531	403 391 5112	ELECT	100U	M	16V
C3532	403 164 0234	CERAMIC	0.1U	Z	25V
C3533	403 164 0234	CERAMIC	0.1U	Z	25V
C3534	403 164 0234	CERAMIC	0.1U	Z	25V
C3535	403 164 0234	CERAMIC	0.1U	Z	25V
C3536	403 164 0234	CERAMIC	0.1U	Z	25V
C3537	403 391 5112	ELECT	100U	M	16V
C3538	403 164 0234	CERAMIC	0.1U	Z	25V
C3558	403 164 0234	CERAMIC	0.1U	Z	25V
C3561	403 391 5112	ELECT	100U	M	16V
C3562	403 164 0234	CERAMIC	0.1U	Z	25V
C3563	403 164 0234	CERAMIC	0.1U	Z	25V
C3564	403 164 0234	CERAMIC	0.1U	Z	25V
C3565	403 164 0234	CERAMIC	0.1U	Z	25V
C3566	403 164 0234	CERAMIC	0.1U	Z	25V
C3567	403 391 5112	ELECT	100U	M	16V
C3581	403 394 1319	ELECT	100U	M	6.3V
C3582	403 164 0234	CERAMIC	0.1U	Z	25V

Electrical Parts List

Key No.	Part No.	Description			
C3583	403 394 1319	ELECT	100U	M	6.3V
C3584	403 164 0234	CERAMIC	0.1U	Z	25V
C3591	403 397 6212	ELECT	10U	M	16V
C361	403 164 0234	CERAMIC	0.1U	Z	25V
C362	403 164 0234	CERAMIC	0.1U	Z	25V
C363	403 233 3818	CERAMIC	10P	C	50V
C364	403 233 3818	CERAMIC	10P	C	50V
C3642	403 394 1319	ELECT	100U	M	6.3V
C365	403 164 0234	CERAMIC	0.1U	Z	25V
C366	403 233 3818	CERAMIC	10P	C	50V
C367	403 233 3818	CERAMIC	10P	C	50V
C391	403 164 0234	CERAMIC	0.1U	Z	25V
C392	403 394 1319	ELECT	100U	M	6.3V
C393	403 164 0234	CERAMIC	0.1U	Z	25V
C394	403 394 1319	ELECT	100U	M	6.3V
C395	403 164 0234	CERAMIC	0.1U	Z	25V
C396	403 347 5517	POS-SOLID	470U	M	4V
C397	403 157 1617	CERAMIC	6P	D	50V
C401	403 164 0234	CERAMIC	0.1U	Z	25V
C402	403 215 2211	CERAMIC	0.01U	K	50V
C411	403 149 9248	CERAMIC	0.01U	Z	50V
C412	403 283 6339	CERAMIC	1U	Z	10V
C413	403 149 9248	CERAMIC	0.01U	Z	50V
C414	403 149 9248	CERAMIC	0.01U	Z	50V
C416	403 164 0234	CERAMIC	0.1U	Z	25V
C417	403 394 1319	ELECT	100U	M	6.3V
C418	403 394 1319	ELECT	100U	M	6.3V
C419	403 149 9248	CERAMIC	0.01U	Z	50V
C420	403 378 3117	CERAMIC	47U	Z	6.3V
C4201	403 164 0234	CERAMIC	0.1U	Z	25V
C4202	403 394 1319	ELECT	100U	M	6.3V
C4203	403 164 0234	CERAMIC	0.1U	Z	25V
C4204	403 164 0234	CERAMIC	0.1U	Z	25V
C4206	403 164 0234	CERAMIC	0.1U	Z	25V
C421	403 283 6339	CERAMIC	1U	Z	10V
C4211	403 164 0234	CERAMIC	0.1U	Z	25V
C4212	403 394 1319	ELECT	100U	M	6.3V
C4213	403 164 0234	CERAMIC	0.1U	Z	25V
C4214	403 164 0234	CERAMIC	0.1U	Z	25V
C4216	403 164 0234	CERAMIC	0.1U	Z	25V
C4217	403 164 0234	CERAMIC	0.1U	Z	25V
C4218	403 164 0234	CERAMIC	0.1U	Z	25V
C422	403 149 9248	CERAMIC	0.01U	Z	50V
C4221	403 164 0234	CERAMIC	0.1U	Z	25V
C4222	403 164 0234	CERAMIC	0.1U	Z	25V
C4223	403 164 0234	CERAMIC	0.1U	Z	25V
C4224	403 164 0234	CERAMIC	0.1U	Z	25V
C4226	403 164 0234	CERAMIC	0.1U	Z	25V
C4227	403 164 0234	CERAMIC	0.1U	Z	25V
C4228	403 164 0234	CERAMIC	0.1U	Z	25V
C4229	403 164 0234	CERAMIC	0.1U	Z	25V
C423	403 149 9248	CERAMIC	0.01U	Z	50V
C4230	403 164 0234	CERAMIC	0.1U	Z	25V
C4231	403 392 1212	ELECT	47U	M	6.3V
C4233	403 164 0234	CERAMIC	0.1U	Z	25V
C4234	403 392 1212	ELECT	47U	M	6.3V
C4236	403 164 0234	CERAMIC	0.1U	Z	25V
C4237	403 155 1312	CERAMIC	150P	J	50V
C4238	403 155 2210	CERAMIC	3300P	K	50V
C4239	403 392 1212	ELECT	47U	M	6.3V
C424	403 149 9248	CERAMIC	0.01U	Z	50V
C4241	403 164 0234	CERAMIC	0.1U	Z	25V
C4246	403 164 0234	CERAMIC	0.1U	Z	25V
C4247	403 164 0234	CERAMIC	0.1U	Z	25V
C4251	403 394 1319	ELECT	100U	M	6.3V
C4252	403 164 0234	CERAMIC	0.1U	Z	25V
C4253	403 164 0234	CERAMIC	0.1U	Z	25V

Key No.	Part No.	Description			
C426	403 149 9248	CERAMIC	0.01U	Z	50V
C4262	403 164 0234	CERAMIC	0.1U	Z	25V
C4263	403 164 0234	CERAMIC	0.1U	Z	25V
C427	403 149 9248	CERAMIC	0.01U	Z	50V
C4272	403 164 0234	CERAMIC	0.1U	Z	25V
C4273	403 164 0234	CERAMIC	0.1U	Z	25V
C428	403 149 9248	CERAMIC	0.01U	Z	50V
C4281	403 164 0234	CERAMIC	0.1U	Z	25V
C429	403 149 9248	CERAMIC	0.01U	Z	50V
C4295	403 347 5517	POS-SOLID	470U	M	4V
C431	403 149 9248	CERAMIC	0.01U	Z	50V
C432	403 149 9248	CERAMIC	0.01U	Z	50V
C433	403 149 9248	CERAMIC	0.01U	Z	50V
C434	403 149 9248	CERAMIC	0.01U	Z	50V
C436	403 149 9248	CERAMIC	0.01U	Z	50V
C437	403 149 9248	CERAMIC	0.01U	Z	50V
C438	403 149 9248	CERAMIC	0.01U	Z	50V
C439	403 149 9248	CERAMIC	0.01U	Z	50V
C4501	403 070 2616	CERAMIC	0.1U	Z	50V
C4502	403 398 7713	ELECT	22U	M	35V
C4503	403 164 0234	CERAMIC	0.1U	Z	25V
C4504	403 164 0234	CERAMIC	0.1U	Z	25V
C4506	403 164 0234	CERAMIC	0.1U	Z	25V
C4507	403 391 5112	ELECT	100U	M	16V
C4508	403 164 0234	CERAMIC	0.1U	Z	25V
C4509	403 164 0234	CERAMIC	0.1U	Z	25V
C4511	403 157 2911	CERAMIC	47P	J	50V
C4512	403 233 3818	CERAMIC	10P	C	50V
C4516	403 164 0234	CERAMIC	0.1U	Z	25V
C4531	403 164 0234	CERAMIC	0.1U	Z	25V
C4532	403 139 7316	CERAMIC	18P	J	50V
C4533	403 139 7316	CERAMIC	18P	J	50V
C4534	403 139 7316	CERAMIC	18P	J	50V
C4541	403 283 6339	CERAMIC	1U	Z	10V
C4542	403 283 6339	CERAMIC	1U	Z	10V
C4543	403 283 6339	CERAMIC	1U	Z	10V
C4544	403 398 3814	ELECT	220U	M	16V
C4545	403 164 0234	CERAMIC	0.1U	Z	25V
C4546	403 157 1914	CERAMIC	10P	D	50V
C4547	403 157 1914	CERAMIC	10P	D	50V
C4548	403 157 1914	CERAMIC	10P	D	50V
C4581	403 155 1619	CERAMIC	33P	J	50V
C4582	403 155 1619	CERAMIC	33P	J	50V
C4583	403 155 1619	CERAMIC	33P	J	50V
C4584	403 157 1518	CERAMIC	3P	C	50V
C4586	403 157 1518	CERAMIC	3P	C	50V
C4587	403 157 1518	CERAMIC	3P	C	50V
C4652	403 233 3818	CERAMIC	10P	C	50V
C4801	403 164 0234	CERAMIC	0.1U	Z	25V
C4802	403 164 0234	CERAMIC	0.1U	Z	25V
C4803	403 164 0234	CERAMIC	0.1U	Z	25V
C4804	403 164 0234	CERAMIC	0.1U	Z	25V
C481	403 394 1319	ELECT	100U	M	6.3V
C4813	403 394 1319	ELECT	100U	M	6.3V
C4814	403 164 0234	CERAMIC	0.1U	Z	25V
C4821	403 164 0234	CERAMIC	0.1U	Z	25V
C4822	403 164 0234	CERAMIC	0.1U	Z	25V
C483	403 394 1319	ELECT	100U	M	6.3V
C4831	403 164 0234	CERAMIC	0.1U	Z	25V
C4836	403 164 0234	CERAMIC	0.1U	Z	25V
C484	403 394 1319	ELECT	100U	M	6.3V
C4841	403 164 0234	CERAMIC	0.1U	Z	25V
C4842	403 164 0234	CERAMIC	0.1U	Z	25V
C4851	403 164 0234	CERAMIC	0.1U	Z	25V
C486	403 394 1319	ELECT	100U	M	6.3V
C4861	403 164 0234	CERAMIC	0.1U	Z	25V
C4862	403 164 0234	CERAMIC	0.1U	Z	25V

Electrical Parts List

Key No.	Part No.	Description			
C487	403 164 0234	CERAMIC	0.1U	Z	25V
C4883	403 394 9315	ELECT	220U	M	6.3V
C4891	403 298 9619	CERAMIC	0.1U	K	16V
	403 325 3313	CERAMIC	0.1U	K	16V
C501	403 164 0234	CERAMIC	0.1U	Z	25V
C502	403 164 0234	CERAMIC	0.1U	Z	25V
C507	403 164 0234	CERAMIC	0.1U	Z	25V
C511	403 392 1212	ELECT	47U	M	6.3V
C512	403 164 0234	CERAMIC	0.1U	Z	25V
C513	403 164 0234	CERAMIC	0.1U	Z	25V
C514	403 164 0234	CERAMIC	0.1U	Z	25V
C521	403 164 0234	CERAMIC	0.1U	Z	25V
C522	403 164 0234	CERAMIC	0.1U	Z	25V
C523	403 164 0234	CERAMIC	0.1U	Z	25V
C524	403 164 0234	CERAMIC	0.1U	Z	25V
C525	403 164 0234	CERAMIC	0.1U	Z	25V
C526	403 164 0234	CERAMIC	0.1U	Z	25V
C527	403 164 0234	CERAMIC	0.1U	Z	25V
C531	403 391 5112	ELECT	100U	M	16V
C532	403 164 0234	CERAMIC	0.1U	Z	25V
C533	403 164 0234	CERAMIC	0.1U	Z	25V
C534	403 164 0234	CERAMIC	0.1U	Z	25V
C536	403 164 0234	CERAMIC	0.1U	Z	25V
C537	403 164 0234	CERAMIC	0.1U	Z	25V
C538	403 164 0234	CERAMIC	0.1U	Z	25V
C539	403 164 0234	CERAMIC	0.1U	Z	25V
C5501	403 164 0234	CERAMIC	0.1U	Z	25V
C5503	403 164 0234	CERAMIC	0.1U	Z	25V
C5504	403 164 0234	CERAMIC	0.1U	Z	25V
C5510	403 398 4118	ELECT	47U	M	16V
C5521	403 164 0234	CERAMIC	0.1U	Z	25V
C5531	403 164 0234	CERAMIC	0.1U	Z	25V
C5532	403 378 3117	CERAMIC	47U	Z	6.3V
C5533	403 164 0234	CERAMIC	0.1U	Z	25V
C5534	403 164 0234	CERAMIC	0.1U	Z	25V
C5551	403 164 0234	CERAMIC	0.1U	Z	25V
C5553	403 164 0234	CERAMIC	0.1U	Z	25V
C5554	403 164 0234	CERAMIC	0.1U	Z	25V
C5559	403 398 4118	ELECT	47U	M	16V
C5801	403 164 0234	CERAMIC	0.1U	Z	25V
C5831	403 164 0234	CERAMIC	0.1U	Z	25V
C5861	403 164 0234	CERAMIC	0.1U	Z	25V
C5881	403 164 0234	CERAMIC	0.1U	Z	25V
C6300	403 164 0234	CERAMIC	0.1U	Z	25V
C6301	403 164 0234	CERAMIC	0.1U	Z	25V
C6302	403 394 1319	ELECT	100U	M	6.3V
C6303	403 164 0234	CERAMIC	0.1U	Z	25V
C6304	403 113 3835	CERAMIC	1000P	K	50V
C6305	403 113 3835	CERAMIC	1000P	K	50V
C6306	403 164 0234	CERAMIC	0.1U	Z	25V
C6307	403 164 0234	CERAMIC	0.1U	Z	25V
C6308	403 164 0234	CERAMIC	0.1U	Z	25V
C6309	403 164 0234	CERAMIC	0.1U	Z	25V
C6311	403 113 3835	CERAMIC	1000P	K	50V
C6312	403 164 0234	CERAMIC	0.1U	Z	25V
C6313	403 113 3835	CERAMIC	1000P	K	50V
C6314	403 164 0234	CERAMIC	0.1U	Z	25V
C6322	403 341 3915	POS-SOLID	100U	M	6.3V
C6323	403 164 0234	CERAMIC	0.1U	Z	25V
C6324	403 113 3835	CERAMIC	1000P	K	50V
C6326	403 164 0234	CERAMIC	0.1U	Z	25V
C6327	403 164 0234	CERAMIC	0.1U	Z	25V
C6328	403 164 0234	CERAMIC	0.1U	Z	25V
C6329	403 164 0234	CERAMIC	0.1U	Z	25V
C6331	403 164 0234	CERAMIC	0.1U	Z	25V
C6332	403 113 3835	CERAMIC	1000P	K	50V
C6333	403 164 0234	CERAMIC	0.1U	Z	25V
C6334	403 113 3835	CERAMIC	1000P	K	50V
C6335	403 164 0234	CERAMIC	0.1U	Z	25V
C6341	403 164 0234	CERAMIC	0.1U	Z	25V
C6343	403 164 0234	CERAMIC	0.1U	Z	25V
C6344	403 113 3835	CERAMIC	1000P	K	50V
C6346	403 164 0234	CERAMIC	0.1U	Z	25V
C6347	403 164 0234	CERAMIC	0.1U	Z	25V
C6348	403 164 0234	CERAMIC	0.1U	Z	25V
C6349	403 164 0234	CERAMIC	0.1U	Z	25V
C6351	403 164 0234	CERAMIC	0.1U	Z	25V
C6352	403 113 3835	CERAMIC	1000P	K	50V
C6353	403 164 0234	CERAMIC	0.1U	Z	25V
C6354	403 113 3835	CERAMIC	1000P	K	50V
C6355	403 164 0234	CERAMIC	0.1U	Z	25V
C6361	403 164 0234	CERAMIC	0.1U	Z	25V
C6362	403 341 3915	POS-SOLID	100U	M	6.3V
C6364	403 164 0234	CERAMIC	0.1U	Z	25V
C6365	403 113 3835	CERAMIC	1000P	K	50V
C6366	403 113 3835	CERAMIC	1000P	K	50V
C6368	403 164 0234	CERAMIC	0.1U	Z	25V
C6369	403 164 0234	CERAMIC	0.1U	Z	25V
C6371	403 164 0234	CERAMIC	0.1U	Z	25V
C6372	403 113 3835	CERAMIC	1000P	K	50V
C6373	403 164 0234	CERAMIC	0.1U	Z	25V
C6374	403 113 3835	CERAMIC	1000P	K	50V
C6376	403 164 0234	CERAMIC	0.1U	Z	25V
C7207	403 164 0234	CERAMIC	0.1U	Z	25V
C7208	403 164 0234	CERAMIC	0.1U	Z	25V
C7801	403 164 0234	CERAMIC	0.1U	Z	25V
C7802	403 164 0234	CERAMIC	0.1U	Z	25V
C7803	403 164 0234	CERAMIC	0.1U	Z	25V
C7806	403 381 5313	ELECT	100U	M	16V
C7807	403 381 5313	ELECT	100U	M	16V
C7811	403 164 0234	CERAMIC	0.1U	Z	25V
C7812	403 113 3835	CERAMIC	1000P	K	50V
C7821	403 381 5313	ELECT	100U	M	16V
C7822	403 164 0234	CERAMIC	0.1U	Z	25V
C7831	403 164 0234	CERAMIC	0.1U	Z	25V
C7832	403 381 5610	ELECT	220U	M	16V
C7833	403 398 3814	ELECT	220U	M	16V
C7841	403 381 5313	ELECT	100U	M	16V
C7842	403 164 0234	CERAMIC	0.1U	Z	25V
C7851	403 164 0234	CERAMIC	0.1U	Z	25V
C7852	403 381 5610	ELECT	220U	M	16V
C7853	403 391 5112	ELECT	100U	M	16V
C7861	403 381 5610	ELECT	220U	M	16V
C7862	403 164 0234	CERAMIC	0.1U	Z	25V
C7871	403 164 0234	CERAMIC	0.1U	Z	25V
C7872	403 381 5610	ELECT	220U	M	16V
C7873	403 398 3814	ELECT	220U	M	16V
C7881	403 381 5610	ELECT	220U	M	16V
C7882	403 164 0234	CERAMIC	0.1U	Z	25V
C7891	403 164 0234	CERAMIC	0.1U	Z	25V
C7892	403 381 5610	ELECT	220U	M	16V
C7893	403 398 3814	ELECT	220U	M	16V
C8001	403 394 1319	ELECT	100U	M	6.3V
C8002	403 283 6339	CERAMIC	1U	Z	10V
C8003	403 394 1319	ELECT	100U	M	6.3V
C8004	403 283 6339	CERAMIC	1U	Z	10V
C8006	403 169 2817	CERAMIC	330P	J	50V
C8007	403 394 1319	ELECT	100U	M	6.3V
C8008	403 283 6339	CERAMIC	1U	Z	10V
C8009	403 157 3611	CERAMIC	100P	J	50V
C8011	403 157 3611	CERAMIC	100P	J	50V
C8012	403 157 3611	CERAMIC	100P	J	50V
C8013	403 157 3611	CERAMIC	100P	J	50V
C8014	403 157 3611	CERAMIC	100P	J	50V

Electrical Parts List

Key No.	Part No.	Description			
C8016	403 164 0234	CERAMIC	0.1U	Z	25V
C8017	403 164 0234	CERAMIC	0.1U	Z	25V
C8018	403 394 1319	ELECT	100U	M	6.3V
C8019	403 283 6339	CERAMIC	1U	Z	10V
C802	403 164 0234	CERAMIC	0.1U	Z	25V
C8021	403 155 1510	CERAMIC	180P	J	50V
C8022	403 169 2817	CERAMIC	330P	J	50V
C8023	403 169 2817	CERAMIC	330P	J	50V
C8024	403 155 1510	CERAMIC	180P	J	50V
C8026	403 169 2817	CERAMIC	330P	J	50V
C8027	403 155 1510	CERAMIC	180P	J	50V
C8028	403 169 2817	CERAMIC	330P	J	50V
C803	403 155 1619	CERAMIC	33P	J	50V
C8031	403 394 1319	ELECT	100U	M	6.3V
C8032	403 298 9619	CERAMIC	0.1U	K	16V
	403 325 3313	CERAMIC	0.1U	K	16V
C804	403 155 1619	CERAMIC	33P	J	50V
C805	403 164 0234	CERAMIC	0.1U	Z	25V
C806	403 392 1212	ELECT	47U	M	6.3V
C8061	403 392 1212	ELECT	47U	M	6.3V
C8062	403 164 0234	CERAMIC	0.1U	Z	25V
C807	403 164 0234	CERAMIC	0.1U	Z	25V
C8071	403 164 0234	CERAMIC	0.1U	Z	25V
C808	403 215 1016	CERAMIC	470P	J	50V
C8081	403 164 0234	CERAMIC	0.1U	Z	25V
C809	403 283 6339	CERAMIC	1U	Z	10V
C8091	403 164 0234	CERAMIC	0.1U	Z	25V
C8092	403 164 0234	CERAMIC	0.1U	Z	25V
C8093	403 392 1212	ELECT	47U	M	6.3V
C810	403 164 0234	CERAMIC	0.1U	Z	25V
C811	403 164 0234	CERAMIC	0.1U	Z	25V
C812	403 164 0234	CERAMIC	0.1U	Z	25V
C813	403 164 0234	CERAMIC	0.1U	Z	25V
C814	403 394 1319	ELECT	100U	M	6.3V
C815	403 164 0234	CERAMIC	0.1U	Z	25V
C816	403 164 0234	CERAMIC	0.1U	Z	25V
C817	403 164 0234	CERAMIC	0.1U	Z	25V
C818	403 394 1319	ELECT	100U	M	6.3V
C819	403 164 0234	CERAMIC	0.1U	Z	25V
C820	403 164 0234	CERAMIC	0.1U	Z	25V
C821	403 164 0234	CERAMIC	0.1U	Z	25V
C822	403 164 0234	CERAMIC	0.1U	Z	25V
C823	403 164 0234	CERAMIC	0.1U	Z	25V
C824	403 164 0234	CERAMIC	0.1U	Z	25V
C831	403 164 0234	CERAMIC	0.1U	Z	25V
C832	403 283 6339	CERAMIC	1U	Z	10V
C834	403 164 0234	CERAMIC	0.1U	Z	25V
C8611	403 394 1319	ELECT	100U	M	6.3V
C8612	403 394 1319	ELECT	100U	M	6.3V
C8613	403 164 0234	CERAMIC	0.1U	Z	25V
C8614	403 164 0234	CERAMIC	0.1U	Z	25V
C9401	403 394 1319	ELECT	100U	M	6.3V
C9402	403 394 1319	ELECT	100U	M	6.3V
C9403	403 394 1319	ELECT	100U	M	6.3V
C9404	403 164 0234	CERAMIC	0.1U	Z	25V
C9406	403 394 1319	ELECT	100U	M	6.3V
C9407	403 164 0234	CERAMIC	0.1U	Z	25V
C9411	403 164 0234	CERAMIC	0.1U	Z	25V
C9412	403 164 0234	CERAMIC	0.1U	Z	25V
C9413	403 164 0234	CERAMIC	0.1U	Z	25V
C9414	403 164 0234	CERAMIC	0.1U	Z	25V
C9416	403 164 0234	CERAMIC	0.1U	Z	25V
C9417	403 164 0234	CERAMIC	0.1U	Z	25V
C9418	403 164 0234	CERAMIC	0.1U	Z	25V
C9419	403 164 0234	CERAMIC	0.1U	Z	25V
C9421	403 164 0234	CERAMIC	0.1U	Z	25V
C9422	403 164 0234	CERAMIC	0.1U	Z	25V
C9423	403 164 0234	CERAMIC	0.1U	Z	25V
C9426	403 164 0234	CERAMIC	0.1U	Z	25V
C9427	403 164 0234	CERAMIC	0.1U	Z	25V
C9428	403 164 0234	CERAMIC	0.1U	Z	25V
C9429	403 164 0234	CERAMIC	0.1U	Z	25V
C9431	403 164 0234	CERAMIC	0.1U	Z	25V
C9432	403 164 0234	CERAMIC	0.1U	Z	25V
C9433	403 164 0234	CERAMIC	0.1U	Z	25V
C9434	403 164 0234	CERAMIC	0.1U	Z	25V
C9436	403 164 0234	CERAMIC	0.1U	Z	25V
C9437	403 164 0234	CERAMIC	0.1U	Z	25V
C9438	403 164 0234	CERAMIC	0.1U	Z	25V
C9439	403 164 0234	CERAMIC	0.1U	Z	25V
C9441	403 164 0234	CERAMIC	0.1U	Z	25V
C9442	403 164 0234	CERAMIC	0.1U	Z	25V
C9443	403 164 0234	CERAMIC	0.1U	Z	25V
C9444	403 164 0234	CERAMIC	0.1U	Z	25V
C9451	403 394 1319	ELECT	100U	M	6.3V
C9452	403 164 0234	CERAMIC	0.1U	Z	25V
C9453	403 164 0234	CERAMIC	0.1U	Z	25V
C9454	403 164 0234	CERAMIC	0.1U	Z	25V
C9456	403 164 0234	CERAMIC	0.1U	Z	25V
C9457	403 164 0234	CERAMIC	0.1U	Z	25V
C9458	403 164 0234	CERAMIC	0.1U	Z	25V
C9459	403 164 0234	CERAMIC	0.1U	Z	25V
C9461	403 164 0234	CERAMIC	0.1U	Z	25V
C9462	403 164 0234	CERAMIC	0.1U	Z	25V
C9463	403 164 0234	CERAMIC	0.1U	Z	25V
C9465	403 164 0234	CERAMIC	0.1U	Z	25V
C9501	403 397 5710	ELECT	100U	M	10V
C9502	403 164 0234	CERAMIC	0.1U	Z	25V
C9503	403 164 0234	CERAMIC	0.1U	Z	25V
C9504	403 164 0234	CERAMIC	0.1U	Z	25V
C9506	403 164 0234	CERAMIC	0.1U	Z	25V
C9507	403 164 0234	CERAMIC	0.1U	Z	25V
C9508	403 164 0234	CERAMIC	0.1U	Z	25V
C9509	403 164 0234	CERAMIC	0.1U	Z	25V
C9511	403 164 0234	CERAMIC	0.1U	Z	25V
C9512	403 164 0234	CERAMIC	0.1U	Z	25V
C9513	403 164 0234	CERAMIC	0.1U	Z	25V
C9514	403 164 0234	CERAMIC	0.1U	Z	25V
C9516	403 164 0234	CERAMIC	0.1U	Z	25V
C9801	403 394 1319	ELECT	100U	M	6.3V
C9802	403 164 0234	CERAMIC	0.1U	Z	25V
C9803	403 153 9112	CERAMIC	5P	C	50V
C9804	403 113 3835	CERAMIC	1000P	K	50V
C9805	403 298 9619	CERAMIC	0.1U	K	16V
	403 325 3313	CERAMIC	0.1U	K	16V
C9806	403 164 0234	CERAMIC	0.1U	Z	25V
C9807	403 394 1319	ELECT	100U	M	6.3V
C9808	403 164 0234	CERAMIC	0.1U	Z	25V
C9809	403 164 0234	CERAMIC	0.1U	Z	25V
C9822	403 164 0234	CERAMIC	0.1U	Z	25V
C9851	403 298 9619	CERAMIC	0.1U	K	16V
	403 325 3313	CERAMIC	0.1U	K	16V
C9852	403 155 1619	CERAMIC	33P	J	50V
C9853	403 155 1619	CERAMIC	33P	J	50V
C9882	403 298 9619	CERAMIC	0.1U	K	16V
	403 325 3313	CERAMIC	0.1U	K	16V
C9884	403 298 9619	CERAMIC	0.1U	K	16V
	403 325 3313	CERAMIC	0.1U	K	16V
C9885	403 155 1619	CERAMIC	33P	J	50V
C9886	403 155 1619	CERAMIC	33P	J	50V
C9887	403 175 4812	NP-ELECT	10U	M	10V
RESISTOR					
R1101	401 105 7919	MT-GLAZE	0.000	ZA	1/16W
R1102	401 105 7919	MT-GLAZE	0.000	ZA	1/16W

Electrical Parts List

Key No.	Part No.	Description
R1103	401 105 7919	MT-GLAZE 0.000 ZA 1/16W
R1104	401 105 7919	MT-GLAZE 0.000 ZA 1/16W
R1105	401 105 7919	MT-GLAZE 0.000 ZA 1/16W
R1106	401 105 7919	MT-GLAZE 0.000 ZA 1/16W
R1107	401 105 2716	MT-GLAZE 220 JA 1/16W
R1108	401 105 2716	MT-GLAZE 220 JA 1/16W
R1109	401 105 5212	MT-GLAZE 470 JA 1/16W
R1112	401 105 7919	MT-GLAZE 0.000 ZA 1/16W
R1113	401 105 0712	MT-GLAZE 100K JA 1/16W
R1114	401 105 7919	MT-GLAZE 0.000 ZA 1/16W
R1115	401 105 0415	MT-GLAZE 100 JA 1/16W
R1116	401 105 0415	MT-GLAZE 100 JA 1/16W
R1117	401 105 7919	MT-GLAZE 0.000 ZA 1/16W
R1118	401 105 7919	MT-GLAZE 0.000 ZA 1/16W
R1121	401 105 0514	MT-GLAZE 1K JA 1/16W
R1123	401 105 7919	MT-GLAZE 0.000 ZA 1/16W
R1124	401 105 0514	MT-GLAZE 1K JA 1/16W
R1126	401 105 7919	MT-GLAZE 0.000 ZA 1/16W
R1127	401 105 4611	MT-GLAZE 3.9K JA 1/16W
R1128	401 105 0613	MT-GLAZE 10K JA 1/16W
R1129	401 105 8114	MT-GLAZE 56K JA 1/16W
R1131	401 105 5410	MT-GLAZE 47K JA 1/16W
R1132	401 105 0514	MT-GLAZE 1K JA 1/16W
R1133	401 105 2013	MT-GLAZE 1.8K JA 1/16W
R1134	401 105 6516	MT-GLAZE 680 JA 1/16W
R1135	401 105 3317	MT-GLAZE 2.7K JA 1/16W
R1136	401 105 2716	MT-GLAZE 220 JA 1/16W
R1137	401 105 6516	MT-GLAZE 680 JA 1/16W
R1139	401 105 5113	MT-GLAZE 47 JA 1/16W
R1141	401 105 0514	MT-GLAZE 1K JA 1/16W
R1142	401 105 8114	MT-GLAZE 56K JA 1/16W
R1143	401 105 5410	MT-GLAZE 47K JA 1/16W
R1144	401 105 0514	MT-GLAZE 1K JA 1/16W
R1145	401 105 2013	MT-GLAZE 1.8K JA 1/16W
R1146	401 105 6516	MT-GLAZE 680 JA 1/16W
R1147	401 105 3317	MT-GLAZE 2.7K JA 1/16W
R1148	401 105 2716	MT-GLAZE 220 JA 1/16W
R1149	401 105 6516	MT-GLAZE 680 JA 1/16W
R1153	401 105 5113	MT-GLAZE 47 JA 1/16W
R1154	401 105 0514	MT-GLAZE 1K JA 1/16W
R1155	401 105 5212	MT-GLAZE 470 JA 1/16W
R1156	401 105 7919	MT-GLAZE 0.000 ZA 1/16W
R1157	401 105 7919	MT-GLAZE 0.000 ZA 1/16W
R1160	401 105 0613	MT-GLAZE 10K JA 1/16W
R1162	401 105 0514	MT-GLAZE 1K JA 1/16W
R1163	401 105 0514	MT-GLAZE 1K JA 1/16W
R1164	401 105 4611	MT-GLAZE 3.9K JA 1/16W
R1316	401 105 7919	MT-GLAZE 0.000 ZA 1/16W
R1351	401 105 7919	MT-GLAZE 0.000 ZA 1/16W
R140	401 105 2815	MT-GLAZE 2.2K JA 1/16W
R1401	401 105 0316	MT-GLAZE 10 JA 1/16W
R1402	401 105 0316	MT-GLAZE 10 JA 1/16W
R1403	401 105 0316	MT-GLAZE 10 JA 1/16W
R1404	401 105 0316	MT-GLAZE 10 JA 1/16W
R1406	401 105 0316	MT-GLAZE 10 JA 1/16W
R1407	401 105 0316	MT-GLAZE 10 JA 1/16W
R1409	401 105 0316	MT-GLAZE 10 JA 1/16W
R141	401 105 2914	MT-GLAZE 22K JA 1/16W
R1411	401 105 0316	MT-GLAZE 10 JA 1/16W
R1412	401 105 0316	MT-GLAZE 10 JA 1/16W
R1416	401 105 0316	MT-GLAZE 10 JA 1/16W
R1417	401 105 0316	MT-GLAZE 10 JA 1/16W
R1418	401 105 0316	MT-GLAZE 10 JA 1/16W
R1419	401 105 0316	MT-GLAZE 10 JA 1/16W
R142	401 105 1610	MT-GLAZE 15K JA 1/16W
R1421	401 105 2617	MT-GLAZE 22 JA 1/16W
R1422	401 105 2617	MT-GLAZE 22 JA 1/16W
R1423	401 105 0316	MT-GLAZE 10 JA 1/16W
R1424	401 105 0316	MT-GLAZE 10 JA 1/16W
R1426	401 105 0316	MT-GLAZE 10 JA 1/16W
R1427	401 105 0316	MT-GLAZE 10 JA 1/16W
R1428	401 105 0316	MT-GLAZE 10 JA 1/16W
R1429	401 105 7919	MT-GLAZE 0.000 ZA 1/16W
R143	401 105 0514	MT-GLAZE 1K JA 1/16W
R1432	401 105 0316	MT-GLAZE 10 JA 1/16W
R1433	401 105 0316	MT-GLAZE 10 JA 1/16W
R1437	401 105 0316	MT-GLAZE 10 JA 1/16W
R1438	401 105 0316	MT-GLAZE 10 JA 1/16W
R1439	401 105 0316	MT-GLAZE 10 JA 1/16W
R144	401 105 0514	MT-GLAZE 1K JA 1/16W
R1442	401 105 0316	MT-GLAZE 10 JA 1/16W
R1443	401 105 2617	MT-GLAZE 22 JA 1/16W
R1444	401 105 2617	MT-GLAZE 22 JA 1/16W
R1446	401 105 7919	MT-GLAZE 0.000 ZA 1/16W
R1447	401 105 0316	MT-GLAZE 10 JA 1/16W
R1448	401 105 0316	MT-GLAZE 10 JA 1/16W
R1449	401 105 0316	MT-GLAZE 10 JA 1/16W
R145	401 105 4819	MT-GLAZE 390K JA 1/16W
R1451	401 105 0316	MT-GLAZE 10 JA 1/16W
R1452	401 105 0316	MT-GLAZE 10 JA 1/16W
R1453	401 105 0316	MT-GLAZE 10 JA 1/16W
R1456	401 105 0316	MT-GLAZE 10 JA 1/16W
R1457	401 105 0316	MT-GLAZE 10 JA 1/16W
R146	401 105 4116	MT-GLAZE 3.3K JA 1/16W
R1461	401 105 0316	MT-GLAZE 10 JA 1/16W
R1462	401 105 0316	MT-GLAZE 10 JA 1/16W
R1463	401 105 0316	MT-GLAZE 10 JA 1/16W
R1464	401 105 0316	MT-GLAZE 10 JA 1/16W
R1467	401 105 2617	MT-GLAZE 22 JA 1/16W
R1468	401 105 7919	MT-GLAZE 0.000 ZA 1/16W
R1469	401 105 2617	MT-GLAZE 22 JA 1/16W
R147	401 105 6011	MT-GLAZE 5.6K JA 1/16W
R1471	401 105 0415	MT-GLAZE 100 JA 1/16W
R1472	401 105 0514	MT-GLAZE 1K JA 1/16W
R1473	401 105 7919	MT-GLAZE 0.000 ZA 1/16W
R148	401 105 0415	MT-GLAZE 100 JA 1/16W
R149	401 105 0514	MT-GLAZE 1K JA 1/16W
R1501	401 105 0415	MT-GLAZE 100 JA 1/16W
R1502	401 105 0415	MT-GLAZE 100 JA 1/16W
R1503	401 105 0415	MT-GLAZE 100 JA 1/16W
R1504	401 105 7919	MT-GLAZE 0.000 ZA 1/16W
R151	401 105 6516	MT-GLAZE 680 JA 1/16W
R1512	401 105 7919	MT-GLAZE 0.000 ZA 1/16W
R1513	401 105 7919	MT-GLAZE 0.000 ZA 1/16W
R1514	401 105 7919	MT-GLAZE 0.000 ZA 1/16W
R1516	401 105 7919	MT-GLAZE 0.000 ZA 1/16W
R1517	401 105 0415	MT-GLAZE 100 JA 1/16W
R1518	401 105 0415	MT-GLAZE 100 JA 1/16W
R1519	401 105 0415	MT-GLAZE 100 JA 1/16W
R152	401 105 3317	MT-GLAZE 2.7K JA 1/16W
R1521	401 105 0415	MT-GLAZE 100 JA 1/16W
R1522	401 105 0415	MT-GLAZE 100 JA 1/16W
R1524	401 105 0415	MT-GLAZE 100 JA 1/16W
R153	401 105 0514	MT-GLAZE 1K JA 1/16W
R1531	401 105 7919	MT-GLAZE 0.000 ZA 1/16W
R1532	401 105 7919	MT-GLAZE 0.000 ZA 1/16W
R1533	401 105 7919	MT-GLAZE 0.000 ZA 1/16W
R1534	401 105 7919	MT-GLAZE 0.000 ZA 1/16W
R1535	401 105 7919	MT-GLAZE 0.000 ZA 1/16W
R1536	401 105 7919	MT-GLAZE 0.000 ZA 1/16W
R154	401 105 0415	MT-GLAZE 100 JA 1/16W
R1542	401 105 7919	MT-GLAZE 0.000 ZA 1/16W
R1543	401 105 7919	MT-GLAZE 0.000 ZA 1/16W
R1544	401 105 7919	MT-GLAZE 0.000 ZA 1/16W

Electrical Parts List

Key No.	Part No.	Description
R1547	401 105 7919	MT-GLAZE 0.000 ZA 1/16W
R1548	401 105 7919	MT-GLAZE 0.000 ZA 1/16W
R1549	401 105 7919	MT-GLAZE 0.000 ZA 1/16W
R1555	401 105 0613	MT-GLAZE 10K JA 1/16W
R1556	401 113 6416	MT-GLAZE 5.1K JA 1/16W
R1557	401 105 1115	MT-GLAZE 12K JA 1/16W
R159	401 105 3010	MT-GLAZE 220K JA 1/16W
R1601	401 105 0613	MT-GLAZE 10K JA 1/16W
R1602	401 105 0613	MT-GLAZE 10K JA 1/16W
R1603	401 105 5410	MT-GLAZE 47K JA 1/16W
R1604	401 105 3416	MT-GLAZE 27K JA 1/16W
R1606	401 105 4116	MT-GLAZE 3.3K JA 1/16W
R1607	401 105 2914	MT-GLAZE 22K JA 1/16W
R161	401 105 5410	MT-GLAZE 47K JA 1/16W
R1611	401 105 7919	MT-GLAZE 0.000 ZA 1/16W
R1612	401 105 2815	MT-GLAZE 2.2K JA 1/16W
R1613	401 105 6011	MT-GLAZE 5.6K JA 1/16W
R1616	401 105 2815	MT-GLAZE 2.2K JA 1/16W
R1617	401 105 7919	MT-GLAZE 0.000 ZA 1/16W
R1618	401 105 6011	MT-GLAZE 5.6K JA 1/16W
R162	401 105 0514	MT-GLAZE 1K JA 1/16W
R1623	401 105 0514	MT-GLAZE 1K JA 1/16W
R1624	401 105 0514	MT-GLAZE 1K JA 1/16W
R1626	401 105 7919	MT-GLAZE 0.000 ZA 1/16W
R1628	401 105 7919	MT-GLAZE 0.000 ZA 1/16W
R163	401 105 2815	MT-GLAZE 2.2K JA 1/16W
R1631	401 105 2815	MT-GLAZE 2.2K JA 1/16W
R1632	401 105 0514	MT-GLAZE 1K JA 1/16W
R164	401 105 5212	MT-GLAZE 470 JA 1/16W
R165	401 105 5311	MT-GLAZE 4.7K JA 1/16W
R167	401 105 0415	MT-GLAZE 100 JA 1/16W
R168	401 105 2716	MT-GLAZE 220 JA 1/16W
R1801	401 105 0613	MT-GLAZE 10K JA 1/16W
R1802	401 105 0613	MT-GLAZE 10K JA 1/16W
R1803	401 105 2815	MT-GLAZE 2.2K JA 1/16W
R1804	401 105 2815	MT-GLAZE 2.2K JA 1/16W
R1805	401 105 7919	MT-GLAZE 0.000 ZA 1/16W
R1806	401 105 0613	MT-GLAZE 10K JA 1/16W
R1808	401 105 7919	MT-GLAZE 0.000 ZA 1/16W
R1809	401 105 0613	MT-GLAZE 10K JA 1/16W
R1811	401 105 7919	MT-GLAZE 0.000 ZA 1/16W
R1812	401 105 7919	MT-GLAZE 0.000 ZA 1/16W
R1813	401 105 7919	MT-GLAZE 0.000 ZA 1/16W
R1814	401 105 7919	MT-GLAZE 0.000 ZA 1/16W
R1815	401 105 0613	MT-GLAZE 10K JA 1/16W
R1816	401 105 7919	MT-GLAZE 0.000 ZA 1/16W
R1817	401 105 7919	MT-GLAZE 0.000 ZA 1/16W
R1818	401 105 6011	MT-GLAZE 5.6K JA 1/16W
R1819	401 105 7919	MT-GLAZE 0.000 ZA 1/16W
R1821	401 105 0613	MT-GLAZE 10K JA 1/16W
R1822	401 105 0613	MT-GLAZE 10K JA 1/16W
R1823	401 105 0613	MT-GLAZE 10K JA 1/16W
R1824	401 105 7919	MT-GLAZE 0.000 ZA 1/16W
R1833	401 105 7919	MT-GLAZE 0.000 ZA 1/16W
R1834	401 105 7919	MT-GLAZE 0.000 ZA 1/16W
R1836	401 105 7919	MT-GLAZE 0.000 ZA 1/16W
R1842	401 105 0613	MT-GLAZE 10K JA 1/16W
R1843	401 105 0613	MT-GLAZE 10K JA 1/16W
R1852	401 105 0613	MT-GLAZE 10K JA 1/16W
R1853	401 105 5410	MT-GLAZE 47K JA 1/16W
R1857	401 105 0613	MT-GLAZE 10K JA 1/16W
R1858	401 105 5410	MT-GLAZE 47K JA 1/16W
R1861	401 105 7919	MT-GLAZE 0.000 ZA 1/16W
R1862	401 105 7919	MT-GLAZE 0.000 ZA 1/16W
R1865	401 105 7919	MT-GLAZE 0.000 ZA 1/16W
R1871	401 105 7919	MT-GLAZE 0.000 ZA 1/16W
R1872	401 105 7919	MT-GLAZE 0.000 ZA 1/16W
R1876	401 105 7919	MT-GLAZE 0.000 ZA 1/16W
R1877	401 105 7919	MT-GLAZE 0.000 ZA 1/16W
R1881	401 105 0613	MT-GLAZE 10K JA 1/16W
R1882	401 105 0613	MT-GLAZE 10K JA 1/16W
R1883	401 105 0613	MT-GLAZE 10K JA 1/16W
R1884	401 105 0613	MT-GLAZE 10K JA 1/16W
R1886	401 105 0613	MT-GLAZE 10K JA 1/16W
R1887	401 105 0613	MT-GLAZE 10K JA 1/16W
R1888	401 105 0613	MT-GLAZE 10K JA 1/16W
R1891	401 105 5311	MT-GLAZE 4.7K JA 1/16W
R1892	401 105 0415	MT-GLAZE 100 JA 1/16W
R1893	401 105 5311	MT-GLAZE 4.7K JA 1/16W
R1894	401 105 0415	MT-GLAZE 100 JA 1/16W
R2000	401 105 0415	MT-GLAZE 100 JA 1/16W
R2001	401 105 0415	MT-GLAZE 100 JA 1/16W
R201	401 313 5813	MT-GLAZE 97.6 FA 1/16W
R202	401 113 4412	MT-GLAZE 75 JA 1/16W
R203	401 313 5813	MT-GLAZE 97.6 FA 1/16W
R204	401 113 4412	MT-GLAZE 75 JA 1/16W
R205	401 313 5813	MT-GLAZE 97.6 FA 1/16W
R206	401 113 4412	MT-GLAZE 75 JA 1/16W
R207	645 050 8561	IMPEDANCE,120 OHM P
R208	401 105 0910	MT-GLAZE 120 JA 1/16W
R209	645 050 8561	IMPEDANCE,120 OHM P
R210	401 105 0910	MT-GLAZE 120 JA 1/16W
R2101	401 105 4611	MT-GLAZE 3.9K JA 1/16W
R2102	401 105 7919	MT-GLAZE 0.000 ZA 1/16W
R2103	401 105 0415	MT-GLAZE 100 JA 1/16W
R2104	401 105 0415	MT-GLAZE 100 JA 1/16W
R2106	401 105 4017	MT-GLAZE 330 JA 1/16W
R2107	401 105 0514	MT-GLAZE 1K JA 1/16W
R2108	401 105 0514	MT-GLAZE 1K JA 1/16W
R2109	401 105 0514	MT-GLAZE 1K JA 1/16W
R211	645 050 8561	IMPEDANCE,120 OHM P
R2111	401 105 0514	MT-GLAZE 1K JA 1/16W
R2112	401 105 6615	MT-GLAZE 6.8K JA 1/16W
R2113	401 105 3317	MT-GLAZE 2.7K JA 1/16W
R212	401 105 0910	MT-GLAZE 120 JA 1/16W
R213	401 105 7919	MT-GLAZE 0.000 ZA 1/16W
R214	401 105 7919	MT-GLAZE 0.000 ZA 1/16W
R215	401 105 7919	MT-GLAZE 0.000 ZA 1/16W
R216	401 105 7919	MT-GLAZE 0.000 ZA 1/16W
R217	401 105 7919	MT-GLAZE 0.000 ZA 1/16W
R219	401 105 3911	MT-GLAZE 33 JA 1/16W
R221	401 105 7919	MT-GLAZE 0.000 ZA 1/16W
R224	401 105 7919	MT-GLAZE 0.000 ZA 1/16W
R226	401 105 3911	MT-GLAZE 33 JA 1/16W
R228	401 105 7919	MT-GLAZE 0.000 ZA 1/16W
R231	401 105 7919	MT-GLAZE 0.000 ZA 1/16W
R2311	401 105 7919	MT-GLAZE 0.000 ZA 1/16W
R2312	401 105 7919	MT-GLAZE 0.000 ZA 1/16W
R2313	401 105 7919	MT-GLAZE 0.000 ZA 1/16W
R2319	401 105 0514	MT-GLAZE 1K JA 1/16W
R2320	401 105 0415	MT-GLAZE 100 JA 1/16W
R2321	401 105 0514	MT-GLAZE 1K JA 1/16W
R2322	401 105 1115	MT-GLAZE 12K JA 1/16W
R2323	401 219 1018	MT-GLAZE 1.6K FA 1/16W
R2324	401 105 0613	MT-GLAZE 10K JA 1/16W
R233	401 105 3911	MT-GLAZE 33 JA 1/16W
R2331	401 105 0316	MT-GLAZE 10 JA 1/16W
R2332	401 105 0316	MT-GLAZE 10 JA 1/16W
R2333	401 105 0316	MT-GLAZE 10 JA 1/16W
R2334	401 105 0514	MT-GLAZE 1K JA 1/16W
R2336	401 105 7919	MT-GLAZE 0.000 ZA 1/16W
R2339	401 105 0316	MT-GLAZE 10 JA 1/16W
R2341	401 217 4110	MT-GLAZE 22K FA 1/16W
R2342	401 217 4110	MT-GLAZE 22K FA 1/16W

Electrical Parts List

Key No.	Part No.	Description
R2344	401 217 4110	MT-GLAZE 22K FA 1/16W
R2345	401 105 0514	MT-GLAZE 1K JA 1/16W
R2346	401 105 0514	MT-GLAZE 1K JA 1/16W
R2348	401 105 7919	MT-GLAZE 0.000 ZA 1/16W
R235	401 105 7919	MT-GLAZE 0.000 ZA 1/16W
R2351	401 234 5619	MT-GLAZE 82K FA 1/16W
R2352	401 202 4019	MT-GLAZE 10K FA 1/16W
R2353	401 234 5619	MT-GLAZE 82K FA 1/16W
R2354	401 202 4019	MT-GLAZE 10K FA 1/16W
R2356	401 105 7919	MT-GLAZE 0.000 ZA 1/16W
R2357	401 202 4019	MT-GLAZE 10K FA 1/16W
R2361	401 105 2013	MT-GLAZE 1.8K JA 1/16W
R2362	401 105 7919	MT-GLAZE 0.000 ZA 1/16W
R2372	401 105 0415	MT-GLAZE 100 JA 1/16W
R2373	401 105 0415	MT-GLAZE 100 JA 1/16W
R2374	401 105 0415	MT-GLAZE 100 JA 1/16W
R2376	401 105 7919	MT-GLAZE 0.000 ZA 1/16W
R2380	401 105 7919	MT-GLAZE 0.000 ZA 1/16W
R2382	401 105 7919	MT-GLAZE 0.000 ZA 1/16W
R2383	401 105 7919	MT-GLAZE 0.000 ZA 1/16W
R2385	401 105 7919	MT-GLAZE 0.000 ZA 1/16W
R2387	401 105 7919	MT-GLAZE 0.000 ZA 1/16W
R2388	401 105 7919	MT-GLAZE 0.000 ZA 1/16W
R2389	401 105 7919	MT-GLAZE 0.000 ZA 1/16W
R2390	401 105 7919	MT-GLAZE 0.000 ZA 1/16W
R2393	401 105 7919	MT-GLAZE 0.000 ZA 1/16W
R2394	401 105 7919	MT-GLAZE 0.000 ZA 1/16W
R2395	401 105 7919	MT-GLAZE 0.000 ZA 1/16W
R2397	401 105 1610	MT-GLAZE 15K JA 1/16W
R2402	401 105 7919	MT-GLAZE 0.000 ZA 1/16W
R2403	401 105 7919	MT-GLAZE 0.000 ZA 1/16W
R2405	401 105 7919	MT-GLAZE 0.000 ZA 1/16W
R2406	401 105 7919	MT-GLAZE 0.000 ZA 1/16W
R2407	401 105 7919	MT-GLAZE 0.000 ZA 1/16W
R2408	401 105 7919	MT-GLAZE 0.000 ZA 1/16W
R2410	401 105 7919	MT-GLAZE 0.000 ZA 1/16W
R2411	401 105 7919	MT-GLAZE 0.000 ZA 1/16W
R244	401 105 0415	MT-GLAZE 100 JA 1/16W
R245	401 105 0415	MT-GLAZE 100 JA 1/16W
R2501	401 105 0415	MT-GLAZE 100 JA 1/16W
R2502	401 105 0415	MT-GLAZE 100 JA 1/16W
R2503	401 105 0415	MT-GLAZE 100 JA 1/16W
R2504	401 105 7919	MT-GLAZE 0.000 ZA 1/16W
R2512	401 105 7919	MT-GLAZE 0.000 ZA 1/16W
R2513	401 105 7919	MT-GLAZE 0.000 ZA 1/16W
R2514	401 105 7919	MT-GLAZE 0.000 ZA 1/16W
R2516	401 105 7919	MT-GLAZE 0.000 ZA 1/16W
R2517	401 105 0415	MT-GLAZE 100 JA 1/16W
R2518	401 105 0415	MT-GLAZE 100 JA 1/16W
R2519	401 105 0415	MT-GLAZE 100 JA 1/16W
R2521	401 105 0415	MT-GLAZE 100 JA 1/16W
R2522	401 105 0415	MT-GLAZE 100 JA 1/16W
R2524	401 105 0415	MT-GLAZE 100 JA 1/16W
R2531	401 105 7919	MT-GLAZE 0.000 ZA 1/16W
R2532	401 105 7919	MT-GLAZE 0.000 ZA 1/16W
R2533	401 105 7919	MT-GLAZE 0.000 ZA 1/16W
R2534	401 105 7919	MT-GLAZE 0.000 ZA 1/16W
R2535	401 105 7919	MT-GLAZE 0.000 ZA 1/16W
R2536	401 105 7919	MT-GLAZE 0.000 ZA 1/16W
R2542	401 105 7919	MT-GLAZE 0.000 ZA 1/16W
R2543	401 105 7919	MT-GLAZE 0.000 ZA 1/16W
R2544	401 105 7919	MT-GLAZE 0.000 ZA 1/16W
R2547	401 105 7919	MT-GLAZE 0.000 ZA 1/16W
R2548	401 105 7919	MT-GLAZE 0.000 ZA 1/16W
R2549	401 105 7919	MT-GLAZE 0.000 ZA 1/16W
R2555	401 105 0613	MT-GLAZE 10K JA 1/16W
R2556	401 113 6416	MT-GLAZE 5.1K JA 1/16W
R2557	401 105 1115	MT-GLAZE 12K JA 1/16W
R260	401 105 7919	MT-GLAZE 0.000 ZA 1/16W
R261	401 105 7919	MT-GLAZE 0.000 ZA 1/16W
R262	401 105 7919	MT-GLAZE 0.000 ZA 1/16W
R269	401 105 7919	MT-GLAZE 0.000 ZA 1/16W
R270	401 105 7919	MT-GLAZE 0.000 ZA 1/16W
R271	401 105 7919	MT-GLAZE 0.000 ZA 1/16W
R272	401 105 0415	MT-GLAZE 100 JA 1/16W
R274	401 105 7919	MT-GLAZE 0.000 ZA 1/16W
R277	401 105 0415	MT-GLAZE 100 JA 1/16W
R278	401 105 0415	MT-GLAZE 100 JA 1/16W
R279	401 105 0316	MT-GLAZE 10 JA 1/16W
R280	401 105 0910	MT-GLAZE 120 JA 1/16W
R281	401 105 0613	MT-GLAZE 10K JA 1/16W
R282	401 105 7919	MT-GLAZE 0.000 ZA 1/16W
R283	401 105 0316	MT-GLAZE 10 JA 1/16W
R286	401 105 4116	MT-GLAZE 3.3K JA 1/16W
R287	401 105 0613	MT-GLAZE 10K JA 1/16W
R288	401 105 7919	MT-GLAZE 0.000 ZA 1/16W
R289	401 105 0415	MT-GLAZE 100 JA 1/16W
R291	401 105 0415	MT-GLAZE 100 JA 1/16W
R292	401 105 0415	MT-GLAZE 100 JA 1/16W
R293	401 105 2013	MT-GLAZE 1.8K JA 1/16W
R294	401 105 2013	MT-GLAZE 1.8K JA 1/16W
R298	401 105 0910	MT-GLAZE 120 JA 1/16W
R299	401 105 0910	MT-GLAZE 120 JA 1/16W
R301	401 105 7919	MT-GLAZE 0.000 ZA 1/16W
R304	401 105 7919	MT-GLAZE 0.000 ZA 1/16W
R308	401 105 7919	MT-GLAZE 0.000 ZA 1/16W
R3101	401 105 7919	MT-GLAZE 0.000 ZA 1/16W
R3102	401 105 6615	MT-GLAZE 6.8K JA 1/16W
R3103	401 105 5311	MT-GLAZE 4.7K JA 1/16W
R3104	401 105 0415	MT-GLAZE 100 JA 1/16W
R3106	401 105 0415	MT-GLAZE 100 JA 1/16W
R3107	401 105 7919	MT-GLAZE 0.000 ZA 1/16W
R3108	401 105 7919	MT-GLAZE 0.000 ZA 1/16W
R311	401 105 7919	MT-GLAZE 0.000 ZA 1/16W
R3114	401 105 7919	MT-GLAZE 0.000 ZA 1/16W
R3116	401 105 7919	MT-GLAZE 0.000 ZA 1/16W
R3117	401 105 7919	MT-GLAZE 0.000 ZA 1/16W
R3118	401 105 7919	MT-GLAZE 0.000 ZA 1/16W
R3119	401 105 7919	MT-GLAZE 0.000 ZA 1/16W
R312	401 105 7919	MT-GLAZE 0.000 ZA 1/16W
R3121	401 105 7919	MT-GLAZE 0.000 ZA 1/16W
R3122	401 105 7919	MT-GLAZE 0.000 ZA 1/16W
R3123	401 105 0613	MT-GLAZE 10K JA 1/16W
R3124	401 105 7919	MT-GLAZE 0.000 ZA 1/16W
R3125	401 177 2416	MT-GLAZE 10M JA 1/16W
R3128	401 105 2815	MT-GLAZE 2.2K JA 1/16W
R3129	401 177 2416	MT-GLAZE 10M JA 1/16W
R313	401 105 7919	MT-GLAZE 0.000 ZA 1/16W
R3131	401 105 3416	MT-GLAZE 27K JA 1/16W
R3132	401 105 7513	MT-GLAZE 82K JA 1/16W
R3133	401 105 1016	MT-GLAZE 1.2K JA 1/16W
R3134	401 105 0514	MT-GLAZE 1K JA 1/16W
R3136	401 105 0514	MT-GLAZE 1K JA 1/16W
R3137	401 105 0415	MT-GLAZE 100 JA 1/16W
R3139	401 105 0514	MT-GLAZE 1K JA 1/16W
R3141	401 105 5915	MT-GLAZE 560 JA 1/16W
R3142	401 105 3317	MT-GLAZE 2.7K JA 1/16W
R3143	401 105 0514	MT-GLAZE 1K JA 1/16W
R3144	401 105 5915	MT-GLAZE 560 JA 1/16W
R3145	401 105 3317	MT-GLAZE 2.7K JA 1/16W
R3146	401 105 0514	MT-GLAZE 1K JA 1/16W
R3147	401 105 5915	MT-GLAZE 560 JA 1/16W
R3148	401 105 3317	MT-GLAZE 2.7K JA 1/16W
R3149	401 105 0514	MT-GLAZE 1K JA 1/16W

Electrical Parts List

Key No.	Part No.	Description
R3160	401 105 3317	MT-GLAZE 2.7K JA 1/16W
R3161	401 105 6615	MT-GLAZE 6.8K JA 1/16W
R3162	401 105 4116	MT-GLAZE 3.3K JA 1/16W
R3163	401 105 4116	MT-GLAZE 3.3K JA 1/16W
R3164	401 105 4116	MT-GLAZE 3.3K JA 1/16W
R3166	401 105 4116	MT-GLAZE 3.3K JA 1/16W
R3167	401 105 4116	MT-GLAZE 3.3K JA 1/16W
R3168	401 105 4116	MT-GLAZE 3.3K JA 1/16W
R317	401 105 0316	MT-GLAZE 10 JA 1/16W
R3171	401 105 4116	MT-GLAZE 3.3K JA 1/16W
R3172	401 105 4116	MT-GLAZE 3.3K JA 1/16W
R3173	401 105 4116	MT-GLAZE 3.3K JA 1/16W
R3174	401 105 0514	MT-GLAZE 1K JA 1/16W
R3176	401 105 0514	MT-GLAZE 1K JA 1/16W
R3177	401 105 0514	MT-GLAZE 1K JA 1/16W
R3178	401 105 0415	MT-GLAZE 100 JA 1/16W
R3179	401 105 0415	MT-GLAZE 100 JA 1/16W
R318	401 105 7919	MT-GLAZE 0.000 ZA 1/16W
R3181	401 105 0415	MT-GLAZE 100 JA 1/16W
R320	401 105 7919	MT-GLAZE 0.000 ZA 1/16W
R3211	401 105 7919	MT-GLAZE 0.000 ZA 1/16W
R3212	401 105 7919	MT-GLAZE 0.000 ZA 1/16W
R3213	401 105 7919	MT-GLAZE 0.000 ZA 1/16W
R3214	401 105 7919	MT-GLAZE 0.000 ZA 1/16W
R322	401 105 7919	MT-GLAZE 0.000 ZA 1/16W
R3221	401 105 7919	MT-GLAZE 0.000 ZA 1/16W
R3222	401 105 7919	MT-GLAZE 0.000 ZA 1/16W
R3223	401 105 7919	MT-GLAZE 0.000 ZA 1/16W
R3224	401 105 7919	MT-GLAZE 0.000 ZA 1/16W
R3239	401 105 7919	MT-GLAZE 0.000 ZA 1/16W
R3240	401 105 7919	MT-GLAZE 0.000 ZA 1/16W
R3241	401 105 7919	MT-GLAZE 0.000 ZA 1/16W
R3242	401 105 7919	MT-GLAZE 0.000 ZA 1/16W
R3243	401 105 7919	MT-GLAZE 0.000 ZA 1/16W
R3251	401 105 7919	MT-GLAZE 0.000 ZA 1/16W
R3252	401 105 7919	MT-GLAZE 0.000 ZA 1/16W
R3253	401 105 7919	MT-GLAZE 0.000 ZA 1/16W
R3254	401 105 7919	MT-GLAZE 0.000 ZA 1/16W
R326	401 105 7919	MT-GLAZE 0.000 ZA 1/16W
R3269	401 105 7919	MT-GLAZE 0.000 ZA 1/16W
R327	401 105 7919	MT-GLAZE 0.000 ZA 1/16W
R3270	401 105 7919	MT-GLAZE 0.000 ZA 1/16W
R3271	401 105 7919	MT-GLAZE 0.000 ZA 1/16W
R3272	401 105 7919	MT-GLAZE 0.000 ZA 1/16W
R3273	401 105 7919	MT-GLAZE 0.000 ZA 1/16W
R328	401 105 7919	MT-GLAZE 0.000 ZA 1/16W
R330	401 105 0316	MT-GLAZE 10 JA 1/16W
R332	401 105 7919	MT-GLAZE 0.000 ZA 1/16W
R333	401 105 7919	MT-GLAZE 0.000 ZA 1/16W
R334	401 105 7919	MT-GLAZE 0.000 ZA 1/16W
R336	401 105 7919	MT-GLAZE 0.000 ZA 1/16W
R337	401 105 0613	MT-GLAZE 10K JA 1/16W
R338	401 105 7919	MT-GLAZE 0.000 ZA 1/16W
R341	401 105 7919	MT-GLAZE 0.000 ZA 1/16W
R342	401 105 2013	MT-GLAZE 1.8K JA 1/16W
R343	401 105 2013	MT-GLAZE 1.8K JA 1/16W
R344	401 105 7919	MT-GLAZE 0.000 ZA 1/16W
R345	401 105 7919	MT-GLAZE 0.000 ZA 1/16W
R3501	401 105 7919	MT-GLAZE 0.000 ZA 1/16W
R3502	401 105 7919	MT-GLAZE 0.000 ZA 1/16W
R3503	401 105 7919	MT-GLAZE 0.000 ZA 1/16W
R3504	401 105 0712	MT-GLAZE 100K JA 1/16W
R3505	401 148 6016	MT-GLAZE 2.2 JA 1/16W
R3506	401 148 6016	MT-GLAZE 2.2 JA 1/16W
R3507	401 148 6016	MT-GLAZE 2.2 JA 1/16W
R3508	401 148 6016	MT-GLAZE 2.2 JA 1/16W
R352	401 105 0613	MT-GLAZE 10K JA 1/16W
R3531	401 105 7919	MT-GLAZE 0.000 ZA 1/16W
R3532	401 105 7919	MT-GLAZE 0.000 ZA 1/16W
R3533	401 105 7919	MT-GLAZE 0.000 ZA 1/16W
R3534	401 105 0712	MT-GLAZE 100K JA 1/16W
R3535	401 148 6016	MT-GLAZE 2.2 JA 1/16W
R3536	401 148 6016	MT-GLAZE 2.2 JA 1/16W
R3537	401 148 6016	MT-GLAZE 2.2 JA 1/16W
R3538	401 148 6016	MT-GLAZE 2.2 JA 1/16W
R354	401 105 7919	MT-GLAZE 0.000 ZA 1/16W
R3553	401 105 7919	MT-GLAZE 0.000 ZA 1/16W
R356	401 105 7919	MT-GLAZE 0.000 ZA 1/16W
R3561	401 105 7919	MT-GLAZE 0.000 ZA 1/16W
R3562	401 105 7919	MT-GLAZE 0.000 ZA 1/16W
R3564	401 105 0712	MT-GLAZE 100K JA 1/16W
R3565	401 148 6016	MT-GLAZE 2.2 JA 1/16W
R3566	401 148 6016	MT-GLAZE 2.2 JA 1/16W
R3567	401 148 6016	MT-GLAZE 2.2 JA 1/16W
R3568	401 148 6016	MT-GLAZE 2.2 JA 1/16W
R358	401 105 7919	MT-GLAZE 0.000 ZA 1/16W
R3581	401 290 1518	MT-GLAZE 0.1 JE 1/2W
R3582	401 105 0415	MT-GLAZE 100 JA 1/16W
R359	401 105 7919	MT-GLAZE 0.000 ZA 1/16W
R3591	401 105 1511	MT-GLAZE 1.5K JA 1/16W
R3592	401 256 7615	MT-GLAZE 3.9K JA 1/10W
R3593	401 105 5311	MT-GLAZE 4.7K JA 1/16W
R3594	401 105 2914	MT-GLAZE 22K JA 1/16W
R361	401 105 7919	MT-GLAZE 0.000 ZA 1/16W
R362	401 105 7919	MT-GLAZE 0.000 ZA 1/16W
R363	401 105 4017	MT-GLAZE 330 JA 1/16W
R364	401 105 7919	MT-GLAZE 0.000 ZA 1/16W
R366	401 105 0613	MT-GLAZE 10K JA 1/16W
R368	401 105 7919	MT-GLAZE 0.000 ZA 1/16W
R369	401 105 0613	MT-GLAZE 10K JA 1/16W
R370	401 105 7919	MT-GLAZE 0.000 ZA 1/16W
R371	401 105 0613	MT-GLAZE 10K JA 1/16W
R373	401 105 0613	MT-GLAZE 10K JA 1/16W
R375	401 105 7919	MT-GLAZE 0.000 ZA 1/16W
R376	401 105 7919	MT-GLAZE 0.000 ZA 1/16W
R379	401 105 7919	MT-GLAZE 0.000 ZA 1/16W
R382	401 105 7919	MT-GLAZE 0.000 ZA 1/16W
R384	401 105 7919	MT-GLAZE 0.000 ZA 1/16W
R387	401 105 7919	MT-GLAZE 0.000 ZA 1/16W
R392	401 105 7919	MT-GLAZE 0.000 ZA 1/16W
R394	401 105 0613	MT-GLAZE 10K JA 1/16W
R396	401 105 0613	MT-GLAZE 10K JA 1/16W
R398	401 105 0613	MT-GLAZE 10K JA 1/16W
R405	401 105 7919	MT-GLAZE 0.000 ZA 1/16W
R407	401 105 7919	MT-GLAZE 0.000 ZA 1/16W
R408	401 105 0316	MT-GLAZE 10 JA 1/16W
R409	401 105 0316	MT-GLAZE 10 JA 1/16W
R410	401 105 0316	MT-GLAZE 10 JA 1/16W
R412	401 105 7919	MT-GLAZE 0.000 ZA 1/16W
R413	401 105 7919	MT-GLAZE 0.000 ZA 1/16W
R414	401 105 7919	MT-GLAZE 0.000 ZA 1/16W
R416	401 105 7919	MT-GLAZE 0.000 ZA 1/16W
R417	401 105 7919	MT-GLAZE 0.000 ZA 1/16W
R418	401 105 7919	MT-GLAZE 0.000 ZA 1/16W
R419	401 105 7919	MT-GLAZE 0.000 ZA 1/16W
R4201	401 105 4116	MT-GLAZE 3.3K JA 1/16W
R4202	401 105 7919	MT-GLAZE 0.000 ZA 1/16W
R4204	401 105 7919	MT-GLAZE 0.000 ZA 1/16W
R4205	401 105 7919	MT-GLAZE 0.000 ZA 1/16W
R4207	401 105 7919	MT-GLAZE 0.000 ZA 1/16W
R4208	401 105 7919	MT-GLAZE 0.000 ZA 1/16W
R4209	401 105 7919	MT-GLAZE 0.000 ZA 1/16W
R421	401 105 7919	MT-GLAZE 0.000 ZA 1/16W
R4211	401 105 7919	MT-GLAZE 0.000 ZA 1/16W

Electrical Parts List

Key No.	Part No.	Description
R4213	401 105 0415	MT-GLAZE 100 JA 1/16W
R4216	401 105 7919	MT-GLAZE 0.000 ZA 1/16W
R4217	401 105 7919	MT-GLAZE 0.000 ZA 1/16W
R422	401 105 7919	MT-GLAZE 0.000 ZA 1/16W
R423	401 105 0415	MT-GLAZE 100 JA 1/16W
R4231	401 105 7919	MT-GLAZE 0.000 ZA 1/16W
R4232	401 105 7919	MT-GLAZE 0.000 ZA 1/16W
R424	401 105 0415	MT-GLAZE 100 JA 1/16W
R4241	401 105 0316	MT-GLAZE 10 JA 1/16W
R4243	401 105 6615	MT-GLAZE 6.8K JA 1/16W
R4246	401 105 2815	MT-GLAZE 2.2K JA 1/16W
R4248	401 113 4610	MT-GLAZE 110 JA 1/16W
R425	401 105 7919	MT-GLAZE 0.000 ZA 1/16W
R4251	401 113 4610	MT-GLAZE 110 JA 1/16W
R4252	401 105 0316	MT-GLAZE 10 JA 1/16W
R4253	401 105 0316	MT-GLAZE 10 JA 1/16W
R4254	401 113 5013	MT-GLAZE 240 JA 1/16W
R4256	401 113 5013	MT-GLAZE 240 JA 1/16W
R426	401 105 0316	MT-GLAZE 10 JA 1/16W
R4263	401 105 0316	MT-GLAZE 10 JA 1/16W
R4264	401 105 0316	MT-GLAZE 10 JA 1/16W
R4268	401 105 0316	MT-GLAZE 10 JA 1/16W
R4269	401 105 0316	MT-GLAZE 10 JA 1/16W
R4274	401 105 0316	MT-GLAZE 10 JA 1/16W
R4275	401 105 0316	MT-GLAZE 10 JA 1/16W
R4278	401 105 0613	MT-GLAZE 10K JA 1/16W
R428	401 105 7919	MT-GLAZE 0.000 ZA 1/16W
R4281	401 105 7919	MT-GLAZE 0.000 ZA 1/16W
R4282	401 105 7919	MT-GLAZE 0.000 ZA 1/16W
R4283	401 105 7919	MT-GLAZE 0.000 ZA 1/16W
R4284	401 105 7919	MT-GLAZE 0.000 ZA 1/16W
R4285	401 105 7919	MT-GLAZE 0.000 ZA 1/16W
R4286	401 105 7919	MT-GLAZE 0.000 ZA 1/16W
R4287	401 105 7919	MT-GLAZE 0.000 ZA 1/16W
R4288	401 105 7919	MT-GLAZE 0.000 ZA 1/16W
R4289	401 105 7919	MT-GLAZE 0.000 ZA 1/16W
R429	401 105 7919	MT-GLAZE 0.000 ZA 1/16W
R4295	401 105 0415	MT-GLAZE 100 JA 1/16W
R4296	401 105 0415	MT-GLAZE 100 JA 1/16W
R431	401 105 2518	MT-GLAZE 20K JA 1/16W
R432	401 113 4412	MT-GLAZE 75 JA 1/16W
R433	401 105 7919	MT-GLAZE 0.000 ZA 1/16W
R434	401 105 7919	MT-GLAZE 0.000 ZA 1/16W
R436	401 105 0316	MT-GLAZE 10 JA 1/16W
R438	401 105 7919	MT-GLAZE 0.000 ZA 1/16W
R439	401 105 0316	MT-GLAZE 10 JA 1/16W
R4501	401 105 4017	MT-GLAZE 330 JA 1/16W
R4502	401 105 5212	MT-GLAZE 470 JA 1/16W
R4503	401 105 1511	MT-GLAZE 1.5K JA 1/16W
R4504	401 105 2013	MT-GLAZE 1.8K JA 1/16W
R4506	401 105 6516	MT-GLAZE 680 JA 1/16W
R4507	401 105 4116	MT-GLAZE 3.3K JA 1/16W
R4508	401 105 0514	MT-GLAZE 1K JA 1/16W
R4509	401 105 1511	MT-GLAZE 1.5K JA 1/16W
R4511	401 105 0514	MT-GLAZE 1K JA 1/16W
R4512	401 105 7919	MT-GLAZE 0.000 ZA 1/16W
R4513	401 105 2815	MT-GLAZE 2.2K JA 1/16W
R4514	401 105 2815	MT-GLAZE 2.2K JA 1/16W
R4515	401 105 7414	MT-GLAZE 8.2K JA 1/16W
R4516	401 105 1412	MT-GLAZE 150 JA 1/16W
R4517	401 105 0514	MT-GLAZE 1K JA 1/16W
R4518	401 105 1412	MT-GLAZE 150 JA 1/16W
R4519	401 105 1412	MT-GLAZE 150 JA 1/16W
R4521	401 105 2815	MT-GLAZE 2.2K JA 1/16W
R4523	401 105 4116	MT-GLAZE 3.3K JA 1/16W
R4524	401 105 7919	MT-GLAZE 0.000 ZA 1/16W
R4526	401 105 1511	MT-GLAZE 1.5K JA 1/16W
R4527	401 105 0613	MT-GLAZE 10K JA 1/16W
R4532	401 105 7919	MT-GLAZE 0.000 ZA 1/16W
R4533	401 105 1511	MT-GLAZE 1.5K JA 1/16W
R4534	401 105 1511	MT-GLAZE 1.5K JA 1/16W
R4539	401 105 7919	MT-GLAZE 0.000 ZA 1/16W
R4541	401 105 7919	MT-GLAZE 0.000 ZA 1/16W
R4542	401 105 6615	MT-GLAZE 6.8K JA 1/16W
R4543	401 105 6615	MT-GLAZE 6.8K JA 1/16W
R4544	401 105 4017	MT-GLAZE 330 JA 1/16W
R4545	401 105 7919	MT-GLAZE 0.000 ZA 1/16W
R4547	401 105 7919	MT-GLAZE 0.000 ZA 1/16W
R4548	401 105 0514	MT-GLAZE 1K JA 1/16W
R4549	401 105 6516	MT-GLAZE 680 JA 1/16W
R4550	403 265 3213	CERAMIC 1000P J 50V
R4553	401 105 7919	MT-GLAZE 0.000 ZA 1/16W
R4555	401 230 2513	MT-GLAZE 1K FA 1/16W
R4559	401 105 7919	MT-GLAZE 0.000 ZA 1/16W
R4562	401 230 2513	MT-GLAZE 1K FA 1/16W
R4566	401 105 7919	MT-GLAZE 0.000 ZA 1/16W
R4568	401 230 2513	MT-GLAZE 1K FA 1/16W
R4571	401 105 5212	MT-GLAZE 470 JA 1/16W
R4572	401 105 0613	MT-GLAZE 10K JA 1/16W
R4573	401 105 7919	MT-GLAZE 0.000 ZA 1/16W
R4574	401 105 5212	MT-GLAZE 470 JA 1/16W
R4575	401 105 4116	MT-GLAZE 3.3K JA 1/16W
R4576	401 105 5212	MT-GLAZE 470 JA 1/16W
R4577	401 105 5212	MT-GLAZE 470 JA 1/16W
R4578	401 105 7919	MT-GLAZE 0.000 ZA 1/16W
R4579	401 105 6516	MT-GLAZE 680 JA 1/16W
R4581	401 105 7919	MT-GLAZE 0.000 ZA 1/16W
R4590	401 105 4116	MT-GLAZE 3.3K JA 1/16W
R4596	401 105 4116	MT-GLAZE 3.3K JA 1/16W
R4597	401 105 1511	MT-GLAZE 1.5K JA 1/16W
R4598	401 105 1511	MT-GLAZE 1.5K JA 1/16W
R4599	401 105 1511	MT-GLAZE 1.5K JA 1/16W
R4603	401 105 7919	MT-GLAZE 0.000 ZA 1/16W
R4604	401 105 7919	MT-GLAZE 0.000 ZA 1/16W
R4605	401 105 7919	MT-GLAZE 0.000 ZA 1/16W
R4651	401 105 0514	MT-GLAZE 1K JA 1/16W
R4652	401 105 0514	MT-GLAZE 1K JA 1/16W
R4663	401 105 1511	MT-GLAZE 1.5K JA 1/16W
R4664	401 105 1511	MT-GLAZE 1.5K JA 1/16W
R4666	401 105 1511	MT-GLAZE 1.5K JA 1/16W
R4682	401 105 3515	MT-GLAZE 270K JA 1/16W
R4683	401 105 4710	MT-GLAZE 39K JA 1/16W
R4684	401 105 8015	MT-GLAZE 1M JA 1/16W
R4685	401 105 0415	MT-GLAZE 100 JA 1/16W
R4686	401 105 3317	MT-GLAZE 2.7K JA 1/16W
R4687	401 105 1511	MT-GLAZE 1.5K JA 1/16W
R4801	401 105 0613	MT-GLAZE 10K JA 1/16W
R4802	401 105 0415	MT-GLAZE 100 JA 1/16W
R4803	401 105 0613	MT-GLAZE 10K JA 1/16W
R4804	401 105 0415	MT-GLAZE 100 JA 1/16W
R4805	401 105 0613	MT-GLAZE 10K JA 1/16W
R4806	401 105 0415	MT-GLAZE 100 JA 1/16W
R4807	401 105 0514	MT-GLAZE 1K JA 1/16W
R4808	401 105 0514	MT-GLAZE 1K JA 1/16W
R4809	401 105 5212	MT-GLAZE 470 JA 1/16W
R481	401 035 4118	MT-GLAZE 0.000 ZA 1/8W
R4811	401 105 2013	MT-GLAZE 1.8K JA 1/16W
R4812	401 105 5311	MT-GLAZE 4.7K JA 1/16W
R4814	401 105 0415	MT-GLAZE 100 JA 1/16W
R4815	401 105 2914	MT-GLAZE 22K JA 1/16W
R4816	401 105 5212	MT-GLAZE 470 JA 1/16W
R4817	401 105 0415	MT-GLAZE 100 JA 1/16W
R482	401 105 0613	MT-GLAZE 10K JA 1/16W
R4822	401 105 0613	MT-GLAZE 10K JA 1/16W

Electrical Parts List

Key No.	Part No.	Description
R4823	401 105 4512	MT-GLAZE 390 JA 1/16W
R4824	401 105 4512	MT-GLAZE 390 JA 1/16W
R4825	401 105 4512	MT-GLAZE 390 JA 1/16W
R4826	401 105 2914	MT-GLAZE 22K JA 1/16W
R4827	401 105 2914	MT-GLAZE 22K JA 1/16W
R4828	401 105 0415	MT-GLAZE 100 JA 1/16W
R4829	401 105 7919	MT-GLAZE 0.000 ZA 1/16W
R4831	401 105 7919	MT-GLAZE 0.000 ZA 1/16W
R4834	401 105 2815	MT-GLAZE 2.2K JA 1/16W
R4835	401 105 7919	MT-GLAZE 0.000 ZA 1/16W
R4837	401 105 2914	MT-GLAZE 22K JA 1/16W
R4838	401 036 1413	MT-GLAZE 220 JA 1/8W
R4839	401 105 4710	MT-GLAZE 39K JA 1/16W
R4841	401 105 0613	MT-GLAZE 10K JA 1/16W
R4844	401 105 0316	MT-GLAZE 10 JA 1/16W
R4845	401 105 0316	MT-GLAZE 10 JA 1/16W
R4847	401 105 7919	MT-GLAZE 0.000 ZA 1/16W
R4861	401 037 5014	MT-GLAZE 0.000 ZA 1/10W
R4862	401 105 0415	MT-GLAZE 100 JA 1/16W
R4863	401 105 0415	MT-GLAZE 100 JA 1/16W
R4871	401 105 7919	MT-GLAZE 0.000 ZA 1/16W
R4872	401 105 7919	MT-GLAZE 0.000 ZA 1/16W
R4873	401 105 7919	MT-GLAZE 0.000 ZA 1/16W
R4874	401 105 7919	MT-GLAZE 0.000 ZA 1/16W
R4878	401 105 7919	MT-GLAZE 0.000 ZA 1/16W
R4879	401 105 7919	MT-GLAZE 0.000 ZA 1/16W
R4897	401 105 0514	MT-GLAZE 1K JA 1/16W
R501	401 105 0415	MT-GLAZE 100 JA 1/16W
R502	401 105 0415	MT-GLAZE 100 JA 1/16W
R503	401 105 0415	MT-GLAZE 100 JA 1/16W
R504	401 105 7919	MT-GLAZE 0.000 ZA 1/16W
R512	401 105 7919	MT-GLAZE 0.000 ZA 1/16W
R513	401 105 7919	MT-GLAZE 0.000 ZA 1/16W
R514	401 105 7919	MT-GLAZE 0.000 ZA 1/16W
R516	401 105 7919	MT-GLAZE 0.000 ZA 1/16W
R517	401 105 0415	MT-GLAZE 100 JA 1/16W
R518	401 105 0415	MT-GLAZE 100 JA 1/16W
R519	401 105 0415	MT-GLAZE 100 JA 1/16W
R521	401 105 0415	MT-GLAZE 100 JA 1/16W
R522	401 105 0415	MT-GLAZE 100 JA 1/16W
R524	401 105 0415	MT-GLAZE 100 JA 1/16W
R531	401 105 7919	MT-GLAZE 0.000 ZA 1/16W
R532	401 105 7919	MT-GLAZE 0.000 ZA 1/16W
R533	401 105 7919	MT-GLAZE 0.000 ZA 1/16W
R534	401 105 7919	MT-GLAZE 0.000 ZA 1/16W
R535	401 105 7919	MT-GLAZE 0.000 ZA 1/16W
R536	401 105 7919	MT-GLAZE 0.000 ZA 1/16W
R542	401 105 7919	MT-GLAZE 0.000 ZA 1/16W
R543	401 105 7919	MT-GLAZE 0.000 ZA 1/16W
R544	401 105 7919	MT-GLAZE 0.000 ZA 1/16W
R547	401 105 7919	MT-GLAZE 0.000 ZA 1/16W
R548	401 105 7919	MT-GLAZE 0.000 ZA 1/16W
R549	401 105 7919	MT-GLAZE 0.000 ZA 1/16W
R5501	401 105 0415	MT-GLAZE 100 JA 1/16W
R5502	401 105 0415	MT-GLAZE 100 JA 1/16W
R5503	401 105 0316	MT-GLAZE 10 JA 1/16W
R5511	401 105 7919	MT-GLAZE 0.000 ZA 1/16W
R5512	401 105 7919	MT-GLAZE 0.000 ZA 1/16W
R5513	401 105 7919	MT-GLAZE 0.000 ZA 1/16W
R5521	401 036 2717	MT-GLAZE 270 JA 1/8W
R5531	401 105 0415	MT-GLAZE 100 JA 1/16W
R5532	401 105 0415	MT-GLAZE 100 JA 1/16W
R5536	401 105 7919	MT-GLAZE 0.000 ZA 1/16W
R5537	401 105 7919	MT-GLAZE 0.000 ZA 1/16W
R5541	401 105 7919	MT-GLAZE 0.000 ZA 1/16W
R555	401 105 0613	MT-GLAZE 10K JA 1/16W
R5551	401 105 7919	MT-GLAZE 0.000 ZA 1/16W
R5552	401 105 7919	MT-GLAZE 0.000 ZA 1/16W
R5553	401 105 0613	MT-GLAZE 10K JA 1/16W
R5554	401 105 4611	MT-GLAZE 3.9K JA 1/16W
R5556	401 113 6614	MT-GLAZE 7.5K JA 1/16W
R5557	401 113 6614	MT-GLAZE 7.5K JA 1/16W
R5558	401 105 7919	MT-GLAZE 0.000 ZA 1/16W
R5559	401 105 7919	MT-GLAZE 0.000 ZA 1/16W
R556	401 113 6416	MT-GLAZE 5.1K JA 1/16W
R557	401 105 1115	MT-GLAZE 12K JA 1/16W
R5801	401 105 7919	MT-GLAZE 0.000 ZA 1/16W
R5803	401 105 7919	MT-GLAZE 0.000 ZA 1/16W
R5805	401 105 7919	MT-GLAZE 0.000 ZA 1/16W
R5806	401 105 7919	MT-GLAZE 0.000 ZA 1/16W
R5808	401 105 7919	MT-GLAZE 0.000 ZA 1/16W
R5811	401 105 7919	MT-GLAZE 0.000 ZA 1/16W
R5813	401 105 7919	MT-GLAZE 0.000 ZA 1/16W
R5816	401 105 7919	MT-GLAZE 0.000 ZA 1/16W
R5818	401 105 7919	MT-GLAZE 0.000 ZA 1/16W
R5831	401 105 7919	MT-GLAZE 0.000 ZA 1/16W
R5833	401 105 7919	MT-GLAZE 0.000 ZA 1/16W
R5836	401 105 7919	MT-GLAZE 0.000 ZA 1/16W
R5838	401 105 7919	MT-GLAZE 0.000 ZA 1/16W
R5841	401 105 7919	MT-GLAZE 0.000 ZA 1/16W
R5843	401 105 7919	MT-GLAZE 0.000 ZA 1/16W
R5846	401 105 7919	MT-GLAZE 0.000 ZA 1/16W
R5848	401 105 7919	MT-GLAZE 0.000 ZA 1/16W
R5851	401 105 0613	MT-GLAZE 10K JA 1/16W
R5852	401 105 1610	MT-GLAZE 15K JA 1/16W
R5853	401 105 0613	MT-GLAZE 10K JA 1/16W
R5854	401 113 6416	MT-GLAZE 5.1K JA 1/16W
R5856	401 105 5311	MT-GLAZE 4.7K JA 1/16W
R5861	401 105 7919	MT-GLAZE 0.000 ZA 1/16W
R5866	401 105 7919	MT-GLAZE 0.000 ZA 1/16W
R5868	401 105 7919	MT-GLAZE 0.000 ZA 1/16W
R5869	401 105 7919	MT-GLAZE 0.000 ZA 1/16W
R5871	401 105 7919	MT-GLAZE 0.000 ZA 1/16W
R5873	401 105 7919	MT-GLAZE 0.000 ZA 1/16W
R5876	401 105 7919	MT-GLAZE 0.000 ZA 1/16W
R5878	401 105 7919	MT-GLAZE 0.000 ZA 1/16W
R5881	401 105 7919	MT-GLAZE 0.000 ZA 1/16W
R5883	401 105 7919	MT-GLAZE 0.000 ZA 1/16W
R5886	401 105 7919	MT-GLAZE 0.000 ZA 1/16W
R5888	401 105 7919	MT-GLAZE 0.000 ZA 1/16W
R5891	401 105 7919	MT-GLAZE 0.000 ZA 1/16W
R6301	401 105 7919	MT-GLAZE 0.000 ZA 1/16W
R6302	401 105 7919	MT-GLAZE 0.000 ZA 1/16W
R6303	401 105 7919	MT-GLAZE 0.000 ZA 1/16W
R6304	401 105 7919	MT-GLAZE 0.000 ZA 1/16W
R6316	401 105 7919	MT-GLAZE 0.000 ZA 1/16W
R6317	401 105 7919	MT-GLAZE 0.000 ZA 1/16W
R6318	401 105 7919	MT-GLAZE 0.000 ZA 1/16W
R6319	401 105 7919	MT-GLAZE 0.000 ZA 1/16W
R7201	401 105 0415	MT-GLAZE 100 JA 1/16W
R7202	401 105 0415	MT-GLAZE 100 JA 1/16W
R7203	401 105 0415	MT-GLAZE 100 JA 1/16W
R7204	401 105 7919	MT-GLAZE 0.000 ZA 1/16W
R7205	401 105 0415	MT-GLAZE 100 JA 1/16W
R7206	401 105 0415	MT-GLAZE 100 JA 1/16W
R7207	401 105 0415	MT-GLAZE 100 JA 1/16W
R7208	401 105 7919	MT-GLAZE 0.000 ZA 1/16W
R7209	401 105 7919	MT-GLAZE 0.000 ZA 1/16W
R7801	401 105 0415	MT-GLAZE 100 JA 1/16W
R7802	401 105 0415	MT-GLAZE 100 JA 1/16W
R7806	401 105 3317	MT-GLAZE 2.7K JA 1/16W
R7807	401 105 3317	MT-GLAZE 2.7K JA 1/16W
R7808	401 105 7919	MT-GLAZE 0.000 ZA 1/16W
R7809	401 105 7919	MT-GLAZE 0.000 ZA 1/16W

Electrical Parts List

Key No.	Part No.	Description
R7811	401 105 7919	MT-GLAZE 0.000 ZA 1/16W
R7816	401 036 2717	MT-GLAZE 270 JA 1/8W
R7817	401 105 0415	MT-GLAZE 100 JA 1/16W
R7819	401 105 7919	MT-GLAZE 0.000 ZA 1/16W
R7821	401 105 0514	MT-GLAZE 1K JA 1/16W
R7823	401 105 0514	MT-GLAZE 1K JA 1/16W
R7824	401 105 6011	MT-GLAZE 5.6K JA 1/16W
R7826	401 105 7919	MT-GLAZE 0.000 ZA 1/16W
R7827	401 113 6713	MT-GLAZE 9.1K JA 1/16W
R7828	401 105 2419	MT-GLAZE 2K JA 1/16W
R7829	401 035 4118	MT-GLAZE 0.000 ZA 1/8W
R7831	401 105 0613	MT-GLAZE 10K JA 1/16W
R7832	401 290 1518	MT-GLAZE 0.1 JE 1/2W
R7833	401 290 1518	MT-GLAZE 0.1 JE 1/2W
R7834	401 290 1518	MT-GLAZE 0.1 JE 1/2W
R7835	401 290 1518	MT-GLAZE 0.1 JE 1/2W
R7836	401 290 1518	MT-GLAZE 0.1 JE 1/2W
R7837	401 035 4118	MT-GLAZE 0.000 ZA 1/8W
R7838	401 035 4118	MT-GLAZE 0.000 ZA 1/8W
R7839	401 035 4118	MT-GLAZE 0.000 ZA 1/8W
R7841	401 105 0514	MT-GLAZE 1K JA 1/16W
R7843	401 105 0514	MT-GLAZE 1K JA 1/16W
R7844	401 105 6011	MT-GLAZE 5.6K JA 1/16W
R7845	401 113 6713	MT-GLAZE 9.1K JA 1/16W
R7846	401 105 7919	MT-GLAZE 0.000 ZA 1/16W
R7847	401 105 7919	MT-GLAZE 0.000 ZA 1/16W
R7848	401 105 2419	MT-GLAZE 2K JA 1/16W
R7849	401 105 7919	MT-GLAZE 0.000 ZA 1/16W
R7850	401 105 7919	MT-GLAZE 0.000 ZA 1/16W
R7851	401 290 1518	MT-GLAZE 0.1 JE 1/2W
R7852	401 105 0613	MT-GLAZE 10K JA 1/16W
R7853	401 105 7919	MT-GLAZE 0.000 ZA 1/16W
R7854	401 290 1518	MT-GLAZE 0.1 JE 1/2W
R7856	401 105 0613	MT-GLAZE 10K JA 1/16W
R7861	401 105 0514	MT-GLAZE 1K JA 1/16W
R7863	401 105 0514	MT-GLAZE 1K JA 1/16W
R7864	401 105 6011	MT-GLAZE 5.6K JA 1/16W
R7867	401 113 6713	MT-GLAZE 9.1K JA 1/16W
R7868	401 105 2419	MT-GLAZE 2K JA 1/16W
R7871	401 290 1518	MT-GLAZE 0.1 JE 1/2W
R7872	401 105 0613	MT-GLAZE 10K JA 1/16W
R7881	401 105 0514	MT-GLAZE 1K JA 1/16W
R7883	401 105 0514	MT-GLAZE 1K JA 1/16W
R7884	401 105 6011	MT-GLAZE 5.6K JA 1/16W
R7886	401 105 7919	MT-GLAZE 0.000 ZA 1/16W
R7887	401 113 6713	MT-GLAZE 9.1K JA 1/16W
R7888	401 105 2419	MT-GLAZE 2K JA 1/16W
R7891	401 290 1518	MT-GLAZE 0.1 JE 1/2W
R7892	401 105 0613	MT-GLAZE 10K JA 1/16W
R8001	401 105 4017	MT-GLAZE 330 JA 1/16W
R8002	401 105 3119	MT-GLAZE 27 JA 1/16W
R8006	401 105 4215	MT-GLAZE 33K JA 1/16W
R8008	401 105 0613	MT-GLAZE 10K JA 1/16W
R801	401 105 5311	MT-GLAZE 4.7K JA 1/16W
R8011	401 105 0613	MT-GLAZE 10K JA 1/16W
R8012	401 105 4215	MT-GLAZE 33K JA 1/16W
R8013	401 105 7919	MT-GLAZE 0.000 ZA 1/16W
R8014	401 105 7919	MT-GLAZE 0.000 ZA 1/16W
R8016	401 113 6416	MT-GLAZE 5.1K JA 1/16W
R8019	401 113 6416	MT-GLAZE 5.1K JA 1/16W
R802	401 105 5311	MT-GLAZE 4.7K JA 1/16W
R8026	401 105 7919	MT-GLAZE 0.000 ZA 1/16W
R8027	401 105 7919	MT-GLAZE 0.000 ZA 1/16W
R803	401 105 0415	MT-GLAZE 100 JA 1/16W
R8036	401 105 0316	MT-GLAZE 10 JA 1/16W
R8037	401 105 0316	MT-GLAZE 10 JA 1/16W
R8038	401 105 0316	MT-GLAZE 10 JA 1/16W
R8039	401 105 0316	MT-GLAZE 10 JA 1/16W
R804	401 105 0415	MT-GLAZE 100 JA 1/16W
R806	401 105 7919	MT-GLAZE 0.000 ZA 1/16W
R8061	401 105 7919	MT-GLAZE 0.000 ZA 1/16W
R8062	401 105 7919	MT-GLAZE 0.000 ZA 1/16W
R8063	401 105 7919	MT-GLAZE 0.000 ZA 1/16W
R8064	401 105 7919	MT-GLAZE 0.000 ZA 1/16W
R8071	401 105 7919	MT-GLAZE 0.000 ZA 1/16W
R8072	401 105 7919	MT-GLAZE 0.000 ZA 1/16W
R8073	401 105 7919	MT-GLAZE 0.000 ZA 1/16W
R8074	401 105 7919	MT-GLAZE 0.000 ZA 1/16W
R808	401 105 7919	MT-GLAZE 0.000 ZA 1/16W
R8082	401 105 7919	MT-GLAZE 0.000 ZA 1/16W
R8083	401 105 0613	MT-GLAZE 10K JA 1/16W
R8084	401 105 0613	MT-GLAZE 10K JA 1/16W
R8086	401 105 7919	MT-GLAZE 0.000 ZA 1/16W
R8087	401 105 7919	MT-GLAZE 0.000 ZA 1/16W
R8092	401 105 7919	MT-GLAZE 0.000 ZA 1/16W
R8093	401 105 0613	MT-GLAZE 10K JA 1/16W
R8094	401 105 0613	MT-GLAZE 10K JA 1/16W
R8096	401 105 7919	MT-GLAZE 0.000 ZA 1/16W
R8097	401 105 7919	MT-GLAZE 0.000 ZA 1/16W
R8098	401 105 7919	MT-GLAZE 0.000 ZA 1/16W
R8101	401 105 7919	MT-GLAZE 0.000 ZA 1/16W
R8102	401 105 7919	MT-GLAZE 0.000 ZA 1/16W
R8103	401 105 7919	MT-GLAZE 0.000 ZA 1/16W
R8104	401 105 7919	MT-GLAZE 0.000 ZA 1/16W
R8106	401 105 7919	MT-GLAZE 0.000 ZA 1/16W
R8108	401 105 0613	MT-GLAZE 10K JA 1/16W
R811	401 105 0613	MT-GLAZE 10K JA 1/16W
R8111	401 105 7919	MT-GLAZE 0.000 ZA 1/16W
R8112	401 105 7919	MT-GLAZE 0.000 ZA 1/16W
R8113	401 105 4017	MT-GLAZE 330 JA 1/16W
R8114	401 035 4118	MT-GLAZE 0.000 ZA 1/8W
R8116	401 105 5311	MT-GLAZE 4.7K JA 1/16W
R8117	401 105 5311	MT-GLAZE 4.7K JA 1/16W
R813	401 105 7919	MT-GLAZE 0.000 ZA 1/16W
R815	401 105 0415	MT-GLAZE 100 JA 1/16W
R816	401 105 5311	MT-GLAZE 4.7K JA 1/16W
R817	401 105 0415	MT-GLAZE 100 JA 1/16W
R818	401 105 5311	MT-GLAZE 4.7K JA 1/16W
R819	401 105 7919	MT-GLAZE 0.000 ZA 1/16W
R820	401 105 7919	MT-GLAZE 0.000 ZA 1/16W
R821	401 105 7919	MT-GLAZE 0.000 ZA 1/16W
R822	401 105 0613	MT-GLAZE 10K JA 1/16W
R823	401 105 7919	MT-GLAZE 0.000 ZA 1/16W
R824	401 105 4611	MT-GLAZE 3.9K JA 1/16W
R825	401 105 4512	MT-GLAZE 390 JA 1/16W
R826	401 105 5311	MT-GLAZE 4.7K JA 1/16W
R827	401 105 7919	MT-GLAZE 0.000 ZA 1/16W
R828	401 105 2914	MT-GLAZE 22K JA 1/16W
R829	401 105 2914	MT-GLAZE 22K JA 1/16W
R831	401 105 0910	MT-GLAZE 120 JA 1/16W
R832	401 105 5311	MT-GLAZE 4.7K JA 1/16W
R833	401 105 0613	MT-GLAZE 10K JA 1/16W
R8341	401 105 0613	MT-GLAZE 10K JA 1/16W
R835	401 105 2617	MT-GLAZE 22 JA 1/16W
R836	401 105 0613	MT-GLAZE 10K JA 1/16W
R838	401 105 0613	MT-GLAZE 10K JA 1/16W
R839	401 105 7919	MT-GLAZE 0.000 ZA 1/16W
R841	401 105 8213	MT-GLAZE 68K JA 1/16W
R842	401 105 8213	MT-GLAZE 68K JA 1/16W
R843	401 105 0514	MT-GLAZE 1K JA 1/16W
R846	401 105 0613	MT-GLAZE 10K JA 1/16W
R848	401 105 2914	MT-GLAZE 22K JA 1/16W
R849	401 105 2914	MT-GLAZE 22K JA 1/16W
R851	401 105 7919	MT-GLAZE 0.000 ZA 1/16W

Electrical Parts List

Key No.	Part No.	Description
R8511	401 105 2914	MT-GLAZE 22K JA 1/16W
R854	401 105 0613	MT-GLAZE 10K JA 1/16W
R855	401 105 0415	MT-GLAZE 100 JA 1/16W
R856	401 105 2013	MT-GLAZE 1.8K JA 1/16W
R857	401 105 4116	MT-GLAZE 3.3K JA 1/16W
R858	401 105 0613	MT-GLAZE 10K JA 1/16W
R860	401 105 7919	MT-GLAZE 0.000 ZA 1/16W
R8601	401 105 7919	MT-GLAZE 0.000 ZA 1/16W
R8603	401 105 7919	MT-GLAZE 0.000 ZA 1/16W
R861	401 105 0613	MT-GLAZE 10K JA 1/16W
R863	401 105 0613	MT-GLAZE 10K JA 1/16W
R866	401 105 0415	MT-GLAZE 100 JA 1/16W
R867	401 105 0415	MT-GLAZE 100 JA 1/16W
R868	401 105 7919	MT-GLAZE 0.000 ZA 1/16W
R869	401 105 0613	MT-GLAZE 10K JA 1/16W
R872	401 105 7919	MT-GLAZE 0.000 ZA 1/16W
R874	401 105 7919	MT-GLAZE 0.000 ZA 1/16W
R875	401 105 7919	MT-GLAZE 0.000 ZA 1/16W
R876	401 105 7919	MT-GLAZE 0.000 ZA 1/16W
R877	401 105 7919	MT-GLAZE 0.000 ZA 1/16W
R878	401 105 7919	MT-GLAZE 0.000 ZA 1/16W
R879	401 105 0613	MT-GLAZE 10K JA 1/16W
R881	401 105 0613	MT-GLAZE 10K JA 1/16W
R882	401 105 0613	MT-GLAZE 10K JA 1/16W
R883	401 105 7919	MT-GLAZE 0.000 ZA 1/16W
R884	401 105 7919	MT-GLAZE 0.000 ZA 1/16W
R885	401 105 7919	MT-GLAZE 0.000 ZA 1/16W
R886	401 105 7919	MT-GLAZE 0.000 ZA 1/16W
R887	401 105 7919	MT-GLAZE 0.000 ZA 1/16W
R888	401 105 7919	MT-GLAZE 0.000 ZA 1/16W
R889	401 105 7919	MT-GLAZE 0.000 ZA 1/16W
R890	401 105 7919	MT-GLAZE 0.000 ZA 1/16W
R891	401 105 7919	MT-GLAZE 0.000 ZA 1/16W
R892	401 105 7919	MT-GLAZE 0.000 ZA 1/16W
R893	401 105 7919	MT-GLAZE 0.000 ZA 1/16W
R894	401 105 7919	MT-GLAZE 0.000 ZA 1/16W
R895	401 105 7919	MT-GLAZE 0.000 ZA 1/16W
R896	401 105 7919	MT-GLAZE 0.000 ZA 1/16W
R897	401 105 7919	MT-GLAZE 0.000 ZA 1/16W
R898	401 105 7919	MT-GLAZE 0.000 ZA 1/16W
R899	401 105 0613	MT-GLAZE 10K JA 1/16W
R9000	401 105 7919	MT-GLAZE 0.000 ZA 1/16W
R9001	401 105 7919	MT-GLAZE 0.000 ZA 1/16W
R9401	401 105 0613	MT-GLAZE 10K JA 1/16W
R9402	401 105 0613	MT-GLAZE 10K JA 1/16W
R9407	401 105 0613	MT-GLAZE 10K JA 1/16W
R9408	401 105 0613	MT-GLAZE 10K JA 1/16W
R9409	401 105 7919	MT-GLAZE 0.000 ZA 1/16W
R9410	401 105 0613	MT-GLAZE 10K JA 1/16W
R9413	401 105 7919	MT-GLAZE 0.000 ZA 1/16W
R9414	401 105 0316	MT-GLAZE 10 JA 1/16W
R9419	401 105 0613	MT-GLAZE 10K JA 1/16W
R9421	401 105 0613	MT-GLAZE 10K JA 1/16W
R9422	401 105 0613	MT-GLAZE 10K JA 1/16W
R9423	401 105 0613	MT-GLAZE 10K JA 1/16W
R9426	401 105 0613	MT-GLAZE 10K JA 1/16W
R9427	401 105 0613	MT-GLAZE 10K JA 1/16W
R9430	401 105 0613	MT-GLAZE 10K JA 1/16W
R9431	401 105 0613	MT-GLAZE 10K JA 1/16W
R9432	401 105 0316	MT-GLAZE 10 JA 1/16W
R9433	401 105 0415	MT-GLAZE 100 JA 1/16W
R9434	401 105 1917	MT-GLAZE 180 JA 1/16W
R9436	401 105 7919	MT-GLAZE 0.000 ZA 1/16W
R9437	401 105 7919	MT-GLAZE 0.000 ZA 1/16W
R9438	401 105 7919	MT-GLAZE 0.000 ZA 1/16W
R9439	401 105 7919	MT-GLAZE 0.000 ZA 1/16W
R9441	401 105 7919	MT-GLAZE 0.000 ZA 1/16W
R9442	401 105 7919	MT-GLAZE 0.000 ZA 1/16W
R9444	401 105 0613	MT-GLAZE 10K JA 1/16W
R9445	401 105 0613	MT-GLAZE 10K JA 1/16W
R9446	401 105 0613	MT-GLAZE 10K JA 1/16W
R9449	401 105 7919	MT-GLAZE 0.000 ZA 1/16W
R9450	401 105 7919	MT-GLAZE 0.000 ZA 1/16W
R9451	401 105 0316	MT-GLAZE 10 JA 1/16W
R9452	401 105 7919	MT-GLAZE 0.000 ZA 1/16W
R9455	401 105 0613	MT-GLAZE 10K JA 1/16W
R9456	401 105 7919	MT-GLAZE 0.000 ZA 1/16W
R9457	401 105 7919	MT-GLAZE 0.000 ZA 1/16W
R9458	401 105 7919	MT-GLAZE 0.000 ZA 1/16W
R9459	401 105 7919	MT-GLAZE 0.000 ZA 1/16W
R9460	401 105 7919	MT-GLAZE 0.000 ZA 1/16W
R9461	401 105 7919	MT-GLAZE 0.000 ZA 1/16W
R9463	401 105 0316	MT-GLAZE 10 JA 1/16W
R9464	401 105 0316	MT-GLAZE 10 JA 1/16W
R9467	401 105 4017	MT-GLAZE 330 JA 1/16W
R9468	401 105 0415	MT-GLAZE 100 JA 1/16W
R9469	401 105 7919	MT-GLAZE 0.000 ZA 1/16W
R9471	401 105 0613	MT-GLAZE 10K JA 1/16W
R9472	401 105 0613	MT-GLAZE 10K JA 1/16W
R9473	401 105 0613	MT-GLAZE 10K JA 1/16W
R9474	401 105 0613	MT-GLAZE 10K JA 1/16W
R9475	401 105 0613	MT-GLAZE 10K JA 1/16W
R9476	401 105 0613	MT-GLAZE 10K JA 1/16W
R9477	401 105 7919	MT-GLAZE 0.000 ZA 1/16W
R9478	401 105 7919	MT-GLAZE 0.000 ZA 1/16W
R9479	401 105 7919	MT-GLAZE 0.000 ZA 1/16W
R9482	401 105 0613	MT-GLAZE 10K JA 1/16W
R9483	401 105 7919	MT-GLAZE 0.000 ZA 1/16W
R9484	401 105 7919	MT-GLAZE 0.000 ZA 1/16W
R9486	401 105 0613	MT-GLAZE 10K JA 1/16W
R9487	401 105 4017	MT-GLAZE 330 JA 1/16W
R9488	401 105 0415	MT-GLAZE 100 JA 1/16W
R9491	401 105 7315	MT-GLAZE 820 JA 1/16W
R9495	401 105 0415	MT-GLAZE 100 JA 1/16W
R9501	401 105 0613	MT-GLAZE 10K JA 1/16W
R9502	401 105 7919	MT-GLAZE 0.000 ZA 1/16W
R9503	401 105 0613	MT-GLAZE 10K JA 1/16W
R9504	401 105 7919	MT-GLAZE 0.000 ZA 1/16W
R9505	401 105 7919	MT-GLAZE 0.000 ZA 1/16W
R9506	401 105 0613	MT-GLAZE 10K JA 1/16W
R9507	401 105 0613	MT-GLAZE 10K JA 1/16W
R9508	401 105 0613	MT-GLAZE 10K JA 1/16W
R9509	401 105 0613	MT-GLAZE 10K JA 1/16W
R9510	401 105 7919	MT-GLAZE 0.000 ZA 1/16W
R9514	401 105 0613	MT-GLAZE 10K JA 1/16W
R9516	401 105 0613	MT-GLAZE 10K JA 1/16W
R9517	401 105 0613	MT-GLAZE 10K JA 1/16W
R9518	401 105 0613	MT-GLAZE 10K JA 1/16W
R9519	401 105 0613	MT-GLAZE 10K JA 1/16W
R9801	401 105 1511	MT-GLAZE 1.5K JA 1/16W
R9803	401 105 8015	MT-GLAZE 1M JA 1/16W
R9804	401 105 0415	MT-GLAZE 100 JA 1/16W
R9805	401 105 0415	MT-GLAZE 100 JA 1/16W
R9806	401 105 0415	MT-GLAZE 100 JA 1/16W
R9807	401 105 0415	MT-GLAZE 100 JA 1/16W
R9808	401 105 7919	MT-GLAZE 0.000 ZA 1/16W
R9812	401 105 5410	MT-GLAZE 47K JA 1/16W
R9813	401 105 7919	MT-GLAZE 0.000 ZA 1/16W
R9814	401 105 7919	MT-GLAZE 0.000 ZA 1/16W
R9819	401 105 7919	MT-GLAZE 0.000 ZA 1/16W
R9821	401 105 7919	MT-GLAZE 0.000 ZA 1/16W
R9824	401 105 7919	MT-GLAZE 0.000 ZA 1/16W
R9825	401 105 7919	MT-GLAZE 0.000 ZA 1/16W
R9826	401 105 0415	MT-GLAZE 100 JA 1/16W

Electrical Parts List

Key No.	Part No.	Description
R9827	401 105 0514	MT-GLAZE 1K JA 1/16W
R9829	401 105 0613	MT-GLAZE 10K JA 1/16W
R9851	401 105 7919	MT-GLAZE 0.000 ZA 1/16W
R9852	401 105 7919	MT-GLAZE 0.000 ZA 1/16W
R9853	401 105 7919	MT-GLAZE 0.000 ZA 1/16W
R9854	401 105 7919	MT-GLAZE 0.000 ZA 1/16W
R9856	401 105 7919	MT-GLAZE 0.000 ZA 1/16W
R9857	401 105 7919	MT-GLAZE 0.000 ZA 1/16W
R9858	401 105 7919	MT-GLAZE 0.000 ZA 1/16W
R9859	401 105 7919	MT-GLAZE 0.000 ZA 1/16W
R9861	401 105 0415	MT-GLAZE 100 JA 1/16W
R9862	401 105 0415	MT-GLAZE 100 JA 1/16W
R9863	401 105 7919	MT-GLAZE 0.000 ZA 1/16W
R9864	401 105 7919	MT-GLAZE 0.000 ZA 1/16W
R9866	401 105 8015	MT-GLAZE 1M JA 1/16W
R9867	401 105 0415	MT-GLAZE 100 JA 1/16W
R9868	401 105 0415	MT-GLAZE 100 JA 1/16W
R9869	401 105 0415	MT-GLAZE 100 JA 1/16W
R9871	401 105 7919	MT-GLAZE 0.000 ZA 1/16W
R9872	401 105 7919	MT-GLAZE 0.000 ZA 1/16W
R9884	401 105 7919	MT-GLAZE 0.000 ZA 1/16W
R9885	401 105 7919	MT-GLAZE 0.000 ZA 1/16W
R9886	401 105 7919	MT-GLAZE 0.000 ZA 1/16W
R9887	401 105 7919	MT-GLAZE 0.000 ZA 1/16W
R9888	401 105 7919	MT-GLAZE 0.000 ZA 1/16W
R9889	401 105 7919	MT-GLAZE 0.000 ZA 1/16W
R9890	401 105 7919	MT-GLAZE 0.000 ZA 1/16W
R9891	401 105 7919	MT-GLAZE 0.000 ZA 1/16W
R9892	401 105 0415	MT-GLAZE 100 JA 1/16W
R9893	401 105 0415	MT-GLAZE 100 JA 1/16W
R9894	401 105 7919	MT-GLAZE 0.000 ZA 1/16W
R9895	401 105 7919	MT-GLAZE 0.000 ZA 1/16W
R9896	401 105 8015	MT-GLAZE 1M JA 1/16W
R9897	401 105 0415	MT-GLAZE 100 JA 1/16W
R9898	401 105 0415	MT-GLAZE 100 JA 1/16W
R9899	401 105 0415	MT-GLAZE 100 JA 1/16W
R9900	401 105 7919	MT-GLAZE 0.000 ZA 1/16W
R9901	401 105 7919	MT-GLAZE 0.000 ZA 1/16W
R9931	401 105 0415	MT-GLAZE 100 JA 1/16W
R9932	401 105 0415	MT-GLAZE 100 JA 1/16W
R9933	401 105 0415	MT-GLAZE 100 JA 1/16W
R9934	401 105 0613	MT-GLAZE 10K JA 1/16W
R9936	401 105 2518	MT-GLAZE 20K JA 1/16W
R9994	401 105 7919	MT-GLAZE 0.000 ZA 1/16W
R9996	401 105 7919	MT-GLAZE 0.000 ZA 1/16W
RB1401	645 037 0663	R-NETWORK 22X4 0.063W
	645 021 4943	R-NETWORK 22X4 1/16W
RB1402	645 037 0663	R-NETWORK 22X4 0.063W
	645 021 4943	R-NETWORK 22X4 1/16W
RB1403	645 037 0663	R-NETWORK 22X4 0.063W
	645 021 4943	R-NETWORK 22X4 1/16W
RB1404	645 037 0663	R-NETWORK 22X4 0.063W
	645 021 4943	R-NETWORK 22X4 1/16W
RB1406	645 037 0663	R-NETWORK 22X4 0.063W
	645 021 4943	R-NETWORK 22X4 1/16W
RB1407	645 037 0663	R-NETWORK 22X4 0.063W
	645 021 4943	R-NETWORK 22X4 1/16W
RB1501	645 037 0656	R-NETWORK 0X4 0.063W
	645 024 7477	R-NETWORK 0X4 1/16W
RB1502	645 037 0656	R-NETWORK 0X4 0.063W
	645 024 7477	R-NETWORK 0X4 1/16W
RB1503	645 037 0656	R-NETWORK 0X4 0.063W
	645 024 7477	R-NETWORK 0X4 1/16W
RB1504	645 037 0656	R-NETWORK 0X4 0.063W
	645 024 7477	R-NETWORK 0X4 1/16W
RB2501	645 037 0656	R-NETWORK 0X4 0.063W
	645 024 7477	R-NETWORK 0X4 1/16W
RB2502	645 037 0656	R-NETWORK 0X4 0.063W
	645 024 7477	R-NETWORK 0X4 1/16W
RB2503	645 037 0656	R-NETWORK 0X4 0.063W
	645 024 7477	R-NETWORK 0X4 1/16W
RB2504	645 037 0656	R-NETWORK 0X4 0.063W
	645 024 7477	R-NETWORK 0X4 1/16W
RB501	645 037 0656	R-NETWORK 0X4 0.063W
	645 024 7477	R-NETWORK 0X4 1/16W
RB502	645 037 0656	R-NETWORK 0X4 0.063W
	645 024 7477	R-NETWORK 0X4 1/16W
RB503	645 037 0656	R-NETWORK 0X4 0.063W
	645 024 7477	R-NETWORK 0X4 1/16W
RB504	645 037 0656	R-NETWORK 0X4 0.063W
	645 024 7477	R-NETWORK 0X4 1/16W
RB5801	645 028 0726	R-NETWORK 100KX4 1/32W
RB5802	645 028 0719	R-NETWORK 10KX4 1/32W
RB5811	645 037 0816	R-NETWORK 0X4 1/32W
RB5812	645 037 0816	R-NETWORK 0X4 1/32W
RB5831	645 028 0719	R-NETWORK 10KX4 1/32W
RB5832	645 028 0719	R-NETWORK 10KX4 1/32W
RB5841	645 037 0816	R-NETWORK 0X4 1/32W
RB5842	645 037 0816	R-NETWORK 0X4 1/32W
RB5861	645 028 0719	R-NETWORK 10KX4 1/32W
RB5862	645 028 0719	R-NETWORK 10KX4 1/32W
RB5871	645 037 0816	R-NETWORK 0X4 1/32W
RB5872	645 037 0816	R-NETWORK 0X4 1/32W
RB5881	645 028 0719	R-NETWORK 10KX4 1/32W
RB5882	645 028 0719	R-NETWORK 10KX4 1/32W
RB5891	645 037 0816	R-NETWORK 0X4 1/32W
RB5892	645 037 0816	R-NETWORK 0X4 1/32W
RB8001	645 037 3107	R-NETWORK 10X4 0.063W
	645 028 5981	R-NETWORK 10X4 1/16W
RB8002	645 037 3107	R-NETWORK 10X4 0.063W
	645 028 5981	R-NETWORK 10X4 1/16W
RB8003	645 037 3107	R-NETWORK 10X4 0.063W
	645 028 5981	R-NETWORK 10X4 1/16W
RB8004	645 037 3107	R-NETWORK 10X4 0.063W
	645 028 5981	R-NETWORK 10X4 1/16W
RB8005	645 037 3107	R-NETWORK 10X4 0.063W
	645 028 5981	R-NETWORK 10X4 1/16W
RB8006	645 037 3107	R-NETWORK 10X4 0.063W
	645 028 5981	R-NETWORK 10X4 1/16W
RB8007	645 037 3107	R-NETWORK 10X4 0.063W
	645 028 5981	R-NETWORK 10X4 1/16W
RB8008	645 037 3107	R-NETWORK 10X4 0.063W
	645 028 5981	R-NETWORK 10X4 1/16W
RB8009	645 037 3107	R-NETWORK 10X4 0.063W
	645 028 5981	R-NETWORK 10X4 1/16W
RB801	645 037 4920	R-NETWORK 3.3KX4 0.063W
	645 031 4070	R-NETWORK 3.3KX4 1/16W
RB8011	645 037 3107	R-NETWORK 10X4 0.063W
	645 028 5981	R-NETWORK 10X4 1/16W
RB8012	645 037 3107	R-NETWORK 10X4 0.063W
	645 028 5981	R-NETWORK 10X4 1/16W
RB8013	645 037 3107	R-NETWORK 10X4 0.063W
	645 028 5981	R-NETWORK 10X4 1/16W
RB8014	645 037 3107	R-NETWORK 10X4 0.063W
	645 028 5981	R-NETWORK 10X4 1/16W
RB802	645 037 4920	R-NETWORK 3.3KX4 0.063W
	645 031 4070	R-NETWORK 3.3KX4 1/16W
RB803	645 037 4920	R-NETWORK 3.3KX4 0.063W
	645 031 4070	R-NETWORK 3.3KX4 1/16W
RB804	645 037 4920	R-NETWORK 3.3KX4 0.063W
	645 031 4070	R-NETWORK 3.3KX4 1/16W
RB9411	645 027 1519	R-NETWORK 0X4 1/16W
RB9412	645 027 1519	R-NETWORK 0X4 1/16W
RB9413	645 027 1519	R-NETWORK 0X4 1/16W

Electrical Parts List

Key No.	Part No.	Description
RB9414	645 027 1519	R-NETWORK 0X4 1/16W
RB9416	645 027 1519	R-NETWORK 0X4 1/16W
RB9417	645 027 1519	R-NETWORK 0X4 1/16W
RB9418	645 027 1519	R-NETWORK 0X4 1/16W
RB9419	645 027 1519	R-NETWORK 0X4 1/16W
RB9802	645 021 0365	R-NETWORK 100KX4 0.063W
	645 025 5397	R-NETWORK 100KX4 1/16W
RB9806	645 021 0365	R-NETWORK 100KX4 0.063W
	645 025 5397	R-NETWORK 100KX4 1/16W
TRANSFORMER		
T1151	645 044 3626	FILTER,LP 7MHZ
T1161	645 044 3626	FILTER,LP 7MHZ
T161	645 044 3626	FILTER,LP 7MHZ
COIL		
L1101	645 026 0964	INDUCTOR,10U K
L1102	645 026 0964	INDUCTOR,10U K
L1103	645 026 0964	INDUCTOR,10U K
L1104	645 026 0971	INDUCTOR,15U K
L1105	645 026 0964	INDUCTOR,10U K
L1151	645 026 1008	INDUCTOR,3.3U M
L1161	645 026 0964	INDUCTOR,10U K
L201	645 020 1776	INDUCTOR,3.3U M
L202	645 020 1776	INDUCTOR,3.3U M
L203	645 020 1776	INDUCTOR,3.3U M
L2101	645 021 1669	INDUCTOR,22U J
L2102	401 037 5014	MT-GLAZE 0.000 ZA 1/10W
L2103	401 037 5014	MT-GLAZE 0.000 ZA 1/10W
L2116	401 037 5014	MT-GLAZE 0.000 ZA 1/10W
L2351	645 050 8448	IMPEDANCE,1000 OHM P
L2361	401 105 7919	MT-GLAZE 0.000 ZA 1/16W
L2362	401 105 7919	MT-GLAZE 0.000 ZA 1/16W
L2381	645 050 8448	IMPEDANCE,1000 OHM P
L2382	401 105 7919	MT-GLAZE 0.000 ZA 1/16W
L241	401 035 4118	MT-GLAZE 0.000 ZA 1/8W
L3101	401 037 5014	MT-GLAZE 0.000 ZA 1/10W
L3102	401 037 5014	MT-GLAZE 0.000 ZA 1/10W
L3103	401 035 4118	MT-GLAZE 0.000 ZA 1/8W
L3104	401 037 5014	MT-GLAZE 0.000 ZA 1/10W
L3106	401 037 5014	MT-GLAZE 0.000 ZA 1/10W
L3107	401 037 5014	MT-GLAZE 0.000 ZA 1/10W
L3108	401 037 5014	MT-GLAZE 0.000 ZA 1/10W
L3161	645 021 1669	INDUCTOR,22U J
L3162	645 021 1669	INDUCTOR,22U J
L3163	645 026 0964	INDUCTOR,10U K
L3211	645 020 1776	INDUCTOR,3.3U M
L3221	645 020 1776	INDUCTOR,3.3U M
L3251	645 020 1776	INDUCTOR,3.3U M
L3591	401 035 4118	MT-GLAZE 0.000 ZA 1/8W
L4214	645 030 5931	INDUCTOR,1300 OHM
L4231	401 037 5014	MT-GLAZE 0.000 ZA 1/10W
L4232	645 001 4512	INDUCTOR,10U K
L4501	645 026 0964	INDUCTOR,10U K
L4541	645 050 8448	IMPEDANCE,1000 OHM P
L4581	645 021 1744	INDUCTOR,5.6U J
L4582	645 021 1744	INDUCTOR,5.6U J
L4583	645 021 1744	INDUCTOR,5.6U J
L4881	645 020 1776	INDUCTOR,3.3U M
L6301	645 050 8448	IMPEDANCE,1000 OHM P
L6302	401 105 7919	MT-GLAZE 0.000 ZA 1/16W
L6303	401 105 7919	MT-GLAZE 0.000 ZA 1/16W
L6304	401 105 7919	MT-GLAZE 0.000 ZA 1/16W
L7801	645 026 1008	INDUCTOR,3.3U M
L8001	645 026 0988	INDUCTOR,2.2U M
L8002	645 026 0988	INDUCTOR,2.2U M
L8003	645 026 0988	INDUCTOR,2.2U M
L8004	645 026 0988	INDUCTOR,2.2U M
L9801	645 021 1645	INDUCTOR,2.2U J

Key No.	Part No.	Description
DIODE		
D1101	407 149 0817	DIODE 1SS355-TE-17
D1102	407 149 0817	DIODE 1SS355-TE-17
D1103	407 149 0817	DIODE 1SS355-TE-17
D1104	407 149 0817	DIODE 1SS355-TE-17
D1106	407 149 0817	DIODE 1SS355-TE-17
D1107	407 149 0817	DIODE 1SS355-TE-17
D1108	407 149 0817	DIODE 1SS355-TE-17
D1109	407 149 0817	DIODE 1SS355-TE-17
D1111	407 149 0817	DIODE 1SS355-TE-17
D1112	407 149 0817	DIODE 1SS355-TE-17
D1113	407 149 0817	DIODE 1SS355-TE-17
D1114	407 149 0817	DIODE 1SS355-TE-17
D1117	407 149 0817	DIODE 1SS355-TE-17
D1351	407 149 0817	DIODE 1SS355-TE-17
D234	407 149 0817	DIODE 1SS355-TE-17
D235	407 149 0817	DIODE 1SS355-TE-17
D2351	407 149 0817	DIODE 1SS355-TE-17
D2353	407 149 0817	DIODE 1SS355-TE-17
D236	407 149 0817	DIODE 1SS355-TE-17
D2381	407 149 0817	DIODE 1SS355-TE-17
D3101	407 149 0817	DIODE 1SS355-TE-17
D3102	407 149 0817	DIODE 1SS355-TE-17
D3211	407 149 0817	DIODE 1SS355-TE-17
D3261	407 149 0817	DIODE 1SS355-TE-17
D3262	407 149 0817	DIODE 1SS355-TE-17
D3501	407 149 0817	DIODE 1SS355-TE-17
D3531	407 149 0817	DIODE 1SS355-TE-17
D3561	407 149 0817	DIODE 1SS355-TE-17
D3581	407 149 0817	DIODE 1SS355-TE-17
D3591	407 149 0817	DIODE 1SS355-TE-17
D3592	407 223 5011	DIODE D1FM3
D3593	407 223 5011	DIODE D1FM3
D391	407 149 0817	DIODE 1SS355-TE-17
D392	407 149 0817	DIODE 1SS355-TE-17
D4202	407 149 0817	DIODE 1SS355-TE-17
D4541	407 149 0817	DIODE 1SS355-TE-17
D4552	407 149 0817	DIODE 1SS355-TE-17
D4681	407 149 0817	DIODE 1SS355-TE-17
D4801	407 221 7116	ZENER DIODE UDZS-TE-1712B
D4802	407 221 7116	ZENER DIODE UDZS-TE-1712B
D4803	407 221 7116	ZENER DIODE UDZS-TE-1712B
D4804	407 221 7116	ZENER DIODE UDZS-TE-1712B
D4805	407 221 7116	ZENER DIODE UDZS-TE-1712B
D4806	407 221 7116	ZENER DIODE UDZS-TE-1712B
D4807	407 221 7116	ZENER DIODE UDZS-TE-1712B
D4808	407 221 7116	ZENER DIODE UDZS-TE-1712B
D4809	407 149 0817	DIODE 1SS355-TE-17
D481	407 149 0817	DIODE 1SS355-TE-17
D4810	407 209 1211	ZD UDZS-TE-176.2B
D4811	407 209 1211	ZD UDZS-TE-176.2B
D4812	407 209 1211	ZD UDZS-TE-176.2B
D4813	407 209 1211	ZD UDZS-TE-176.2B
D4814	407 149 0817	DIODE 1SS355-TE-17
D4815	407 149 0817	DIODE 1SS355-TE-17
D4816	407 149 0817	DIODE 1SS355-TE-17
D4817	407 149 0817	DIODE 1SS355-TE-17
D4818	407 149 0817	DIODE 1SS355-TE-17
D4819	407 149 0817	DIODE 1SS355-TE-17
D5521	407 175 2816	ZD 02CZ12Y(TE85R)
	407 071 0114	ZENER DIODE DZD12Y-TA
D6301	407 149 0817	DIODE 1SS355-TE-17
D7801	407 175 2816	ZD 02CZ12Y(TE85R)
	407 071 0114	ZENER DIODE DZD12Y-TA
D7811	407 206 6318	ZD UDZS-TE-175.1B
D7831	407 149 0817	DIODE 1SS355-TE-17
D7832	407 149 0817	DIODE 1SS355-TE-17

Electrical Parts List

Key No.	Part No.	Description
D7851	407 149 0817	DIODE 1SS355-TE-17
D7852	407 149 0817	DIODE 1SS355-TE-17
D7871	407 149 0817	DIODE 1SS355-TE-17
D7872	407 149 0817	DIODE 1SS355-TE-17
D7891	407 149 0817	DIODE 1SS355-TE-17
D7892	407 149 0817	DIODE 1SS355-TE-17
D8001	407 149 0817	DIODE 1SS355-TE-17
D801	407 149 0817	DIODE 1SS355-TE-17
D8013	407 149 0817	DIODE 1SS355-TE-17
D8033	407 149 0817	DIODE 1SS355-TE-17
D8061	407 201 2721	DIODE RB051L-40-TE25
D8062	407 201 2721	DIODE RB051L-40-TE25
D8063	407 149 0817	DIODE 1SS355-TE-17
D8064	407 149 0817	DIODE 1SS355-TE-17
D8066	407 149 0817	DIODE 1SS355-TE-17
D8067	407 149 0817	DIODE 1SS355-TE-17
D8068	407 149 0817	DIODE 1SS355-TE-17
MISCELLANEOUS		
IC807	407 236 0317	SENSOR MPXHZ6115A6T1
X1101	645 045 9122	OSC,CRYSTAL 20MHZ
X3101	645 047 1568	OSC,CRYSTAL 16.200MHZ
X361	645 047 6587	OSC,CRYSTAL 26.000MHZ
X362	645 047 6846	OSC,CRYSTAL 24.000MHZ
X801	645 053 4973	OSC,CRYSTAL 6.4512MHZ
X9801	645 035 8906	OSC,CRYSTAL 48MHZ
X9851	645 035 2249	OSC,CRYSTAL 6.7584MHZ
X9884	645 035 2249	OSC,CRYSTAL 6.7584MHZ

A/V BOARD

610 318 8560 ASSY,PWB,A/V ME5A

Key No.	Part No.	Description
TRANSISTOR		
Q1001	405 134 5925	TR 2SA1037AK-T146-R
	405 147 2215	TR 2SA1037AK-S-T146
	405 002 0318	TR 2SA1037K T146 R
	405 002 0417	TR 2SA1037K T146 S
	405 002 6726	TR 2SA1179-M6-TB
	405 002 6924	TR 2SA1179-M7-TB
	405 163 1513	TR 2SA1179N-M6-TB
	405 163 2718	TR 2SA1179N-M7-TB
Q1002	405 134 5925	TR 2SA1037AK-T146-R
	405 147 2215	TR 2SA1037AK-S-T146
	405 002 0318	TR 2SA1037K T146 R
	405 002 0417	TR 2SA1037K T146 S
	405 002 6726	TR 2SA1179-M6-TB
	405 002 6924	TR 2SA1179-M7-TB
	405 163 1513	TR 2SA1179N-M6-TB
	405 163 2718	TR 2SA1179N-M7-TB
Q1003	405 134 5925	TR 2SA1037AK-T146-R
	405 147 2215	TR 2SA1037AK-S-T146
	405 002 0318	TR 2SA1037K T146 R
	405 002 0417	TR 2SA1037K T146 S
	405 002 6726	TR 2SA1179-M6-TB
	405 002 6924	TR 2SA1179-M7-TB
	405 163 1513	TR 2SA1179N-M6-TB
	405 163 2718	TR 2SA1179N-M7-TB
Q1004	405 116 6322	TR 2SA1815-4-TB
Q1006	405 116 6322	TR 2SA1815-4-TB
Q1007	405 116 6322	TR 2SA1815-4-TB
Q1008	405 116 6322	TR 2SA1815-4-TB
Q1009	405 116 6322	TR 2SA1815-4-TB
Q1011	405 116 6322	TR 2SA1815-4-TB
Q1012	405 116 6322	TR 2SA1815-4-TB
Q1013	405 116 6322	TR 2SA1815-4-TB
Q1014	405 116 6322	TR 2SA1815-4-TB
Q1016	405 116 6322	TR 2SA1815-4-TB
Q1201	405 014 4519	TR 2SC2412K T146 R
	405 014 4618	TR 2SC2412K T146 S
	405 015 8724	TR 2SC2812-L6-TB
	405 015 8922	TR 2SC2812-L7-TB
	405 163 1612	TR 2SC2812N-L6-TB0
	405 163 1711	TR 2SC2812N-L7-TB0
Q1202	405 014 4519	TR 2SC2412K T146 R
	405 014 4618	TR 2SC2412K T146 S
	405 015 8724	TR 2SC2812-L6-TB
	405 015 8922	TR 2SC2812-L7-TB
	405 163 1612	TR 2SC2812N-L6-TB0
	405 163 1711	TR 2SC2812N-L7-TB0
Q1203	405 014 4519	TR 2SC2412K T146 R
	405 014 4618	TR 2SC2412K T146 S
	405 015 8724	TR 2SC2812-L6-TB
	405 015 8922	TR 2SC2812-L7-TB
	405 163 1612	TR 2SC2812N-L6-TB0
	405 163 1711	TR 2SC2812N-L7-TB0
Q1204	405 014 4519	TR 2SC2412K T146 R
	405 014 4618	TR 2SC2412K T146 S
	405 015 8724	TR 2SC2812-L6-TB
	405 015 8922	TR 2SC2812-L7-TB
	405 163 1612	TR 2SC2812N-L6-TB0
	405 163 1711	TR 2SC2812N-L7-TB0
Q1206	405 014 4519	TR 2SC2412K T146 R
	405 014 4618	TR 2SC2412K T146 S
	405 015 8724	TR 2SC2812-L6-TB
	405 015 8922	TR 2SC2812-L7-TB
	405 163 1612	TR 2SC2812N-L6-TB0
	405 163 1711	TR 2SC2812N-L7-TB0
Q2001	405 134 5925	TR 2SA1037AK-T146-R
	405 147 2215	TR 2SA1037AK-S-T146
	405 002 0318	TR 2SA1037K T146 R
	405 002 0417	TR 2SA1037K T146 S
	405 002 6726	TR 2SA1179-M6-TB
	405 002 6924	TR 2SA1179-M7-TB
	405 163 1513	TR 2SA1179N-M6-TB
	405 163 2718	TR 2SA1179N-M7-TB
Q2002	405 134 5925	TR 2SA1037AK-T146-R
	405 147 2215	TR 2SA1037AK-S-T146
	405 002 0318	TR 2SA1037K T146 R
	405 002 0417	TR 2SA1037K T146 S
	405 002 6726	TR 2SA1179-M6-TB
	405 002 6924	TR 2SA1179-M7-TB
	405 163 1513	TR 2SA1179N-M6-TB
	405 163 2718	TR 2SA1179N-M7-TB
Q2003	405 134 5925	TR 2SA1037AK-T146-R
	405 147 2215	TR 2SA1037AK-S-T146
	405 002 0318	TR 2SA1037K T146 R
	405 002 0417	TR 2SA1037K T146 S
	405 002 6726	TR 2SA1179-M6-TB
	405 002 6924	TR 2SA1179-M7-TB
	405 163 1513	TR 2SA1179N-M6-TB
	405 163 2718	TR 2SA1179N-M7-TB
Q2004	405 134 5925	TR 2SA1037AK-T146-R
	405 147 2215	TR 2SA1037AK-S-T146
	405 002 0318	TR 2SA1037K T146 R
	405 002 0417	TR 2SA1037K T146 S
	405 002 6726	TR 2SA1179-M6-TB
	405 002 6924	TR 2SA1179-M7-TB
	405 163 1513	TR 2SA1179N-M6-TB
	405 163 2718	TR 2SA1179N-M7-TB
Q2006	405 134 5925	TR 2SA1037AK-T146-R
	405 147 2215	TR 2SA1037AK-S-T146
	405 002 0318	TR 2SA1037K T146 R
	405 002 0417	TR 2SA1037K T146 S
	405 002 6726	TR 2SA1179-M6-TB

Electrical Parts List

Key No.	Part No.	Description
	405 002 6924	TR 2SA1179-M7-TB
	405 163 1513	TR 2SA1179N-M6-TB
	405 163 2718	TR 2SA1179N-M7-TB
Q3801	405 014 4519	TR 2SC2412K T146 R
	405 014 4618	TR 2SC2412K T146 S
	405 015 8724	TR 2SC2812-L6-TB
	405 015 8922	TR 2SC2812-L7-TB
	405 163 1612	TR 2SC2812N-L6-TB0
	405 163 1711	TR 2SC2812N-L7-TB0
Q4102	405 014 4519	TR 2SC2412K T146 R
	405 014 4618	TR 2SC2412K T146 S
	405 015 8724	TR 2SC2812-L6-TB
	405 015 8922	TR 2SC2812-L7-TB
	405 163 1612	TR 2SC2812N-L6-TB0
	405 163 1711	TR 2SC2812N-L7-TB0
Q4104	405 014 4519	TR 2SC2412K T146 R
	405 014 4618	TR 2SC2412K T146 S
	405 015 8724	TR 2SC2812-L6-TB
	405 015 8922	TR 2SC2812-L7-TB
	405 163 1612	TR 2SC2812N-L6-TB0
	405 163 1711	TR 2SC2812N-L7-TB0
Q4107	405 014 4519	TR 2SC2412K T146 R
	405 014 4618	TR 2SC2412K T146 S
	405 015 8724	TR 2SC2812-L6-TB
	405 015 8922	TR 2SC2812-L7-TB
	405 163 1612	TR 2SC2812N-L6-TB0
	405 163 1711	TR 2SC2812N-L7-TB0
Q4109	405 014 4519	TR 2SC2412K T146 R
	405 014 4618	TR 2SC2412K T146 S
	405 015 8724	TR 2SC2812-L6-TB
	405 015 8922	TR 2SC2812-L7-TB
	405 163 1612	TR 2SC2812N-L6-TB0
	405 163 1711	TR 2SC2812N-L7-TB0
Q4111	405 014 4519	TR 2SC2412K T146 R
	405 014 4618	TR 2SC2412K T146 S
	405 015 8724	TR 2SC2812-L6-TB
	405 015 8922	TR 2SC2812-L7-TB
	405 163 1612	TR 2SC2812N-L6-TB0
	405 163 1711	TR 2SC2812N-L7-TB0
Q4112	405 014 4519	TR 2SC2412K T146 R
	405 014 4618	TR 2SC2412K T146 S
	405 015 8724	TR 2SC2812-L6-TB
	405 015 8922	TR 2SC2812-L7-TB
	405 163 1612	TR 2SC2812N-L6-TB0
	405 163 1711	TR 2SC2812N-L7-TB0
Q5001	405 014 4519	TR 2SC2412K T146 R
	405 014 4618	TR 2SC2412K T146 S
	405 015 8724	TR 2SC2812-L6-TB
	405 015 8922	TR 2SC2812-L7-TB
	405 163 1612	TR 2SC2812N-L6-TB0
	405 163 1711	TR 2SC2812N-L7-TB0
Q5002	405 014 4519	TR 2SC2412K T146 R
	405 014 4618	TR 2SC2412K T146 S
	405 015 8724	TR 2SC2812-L6-TB
	405 015 8922	TR 2SC2812-L7-TB
	405 163 1612	TR 2SC2812N-L6-TB0
	405 163 1711	TR 2SC2812N-L7-TB0
Q5003	405 014 4519	TR 2SC2412K T146 R
	405 014 4618	TR 2SC2412K T146 S
	405 015 8724	TR 2SC2812-L6-TB
	405 015 8922	TR 2SC2812-L7-TB
	405 163 1612	TR 2SC2812N-L6-TB0
	405 163 1711	TR 2SC2812N-L7-TB0
Q5004	405 014 4519	TR 2SC2412K T146 R
	405 014 4618	TR 2SC2412K T146 S
	405 015 8724	TR 2SC2812-L6-TB
	405 015 8922	TR 2SC2812-L7-TB
	405 163 1612	TR 2SC2812N-L6-TB0
	405 163 1711	TR 2SC2812N-L7-TB0
Q5006	405 014 4519	TR 2SC2412K T146 R
	405 014 4618	TR 2SC2412K T146 S
	405 015 8724	TR 2SC2812-L6-TB
	405 015 8922	TR 2SC2812-L7-TB
	405 163 1612	TR 2SC2812N-L6-TB0
	405 163 1711	TR 2SC2812N-L7-TB0
Q5007	405 014 4519	TR 2SC2412K T146 R
	405 014 4618	TR 2SC2412K T146 S
	405 015 8724	TR 2SC2812-L6-TB
	405 015 8922	TR 2SC2812-L7-TB
	405 163 1612	TR 2SC2812N-L6-TB0
	405 163 1711	TR 2SC2812N-L7-TB0
Q5301	405 134 5925	TR 2SA1037AK-T146-R
	405 147 2215	TR 2SA1037AK-S-T146
	405 002 0318	TR 2SA1037K T146 R
	405 002 0417	TR 2SA1037K T146 S
	405 002 6726	TR 2SA1179-M6-TB
	405 002 6924	TR 2SA1179-M7-TB
	405 163 1513	TR 2SA1179N-M6-TB
	405 163 2718	TR 2SA1179N-M7-TB
Q5302	405 014 4519	TR 2SC2412K T146 R
	405 014 4618	TR 2SC2412K T146 S
	405 015 8724	TR 2SC2812-L6-TB
	405 015 8922	TR 2SC2812-L7-TB
	405 163 1612	TR 2SC2812N-L6-TB0
	405 163 1711	TR 2SC2812N-L7-TB0
Q5304	405 014 4519	TR 2SC2412K T146 R
	405 014 4618	TR 2SC2412K T146 S
	405 015 8724	TR 2SC2812-L6-TB
	405 015 8922	TR 2SC2812-L7-TB
	405 163 1612	TR 2SC2812N-L6-TB0
	405 163 1711	TR 2SC2812N-L7-TB0
Q5308	405 014 4519	TR 2SC2412K T146 R
	405 014 4618	TR 2SC2412K T146 S
	405 015 8724	TR 2SC2812-L6-TB
	405 015 8922	TR 2SC2812-L7-TB
	405 163 1612	TR 2SC2812N-L6-TB0
	405 163 1711	TR 2SC2812N-L7-TB0
INTEGRATED CIRCUIT		
IC1201	409 462 6019	IC AD8185ARU-REEL7
IC1202	409 536 5610	IC AD8075ARU-REEL
IC3801	409 380 6313	IC HIN232CB
IC3802	410 457 7109	IC UPD78F9801GB-8ES-MC3A
	410 466 3109	IC TWM7000-170010
IC3803	410 457 7000	IC UPD78F9116BMC-5A4-MC3A
	410 457 0100	IC TWM7000-210010
IC3804	409 395 5912	IC TC7SH00FU-(TE85L)
IC3807	410 356 7507	IC SN74HCT244PWR
IC4101	409 490 8016	IC CXA2151Q
IC4102	409 336 3222	IC TC7SH02FU(TE85L)
IC4104	409 474 5314	IC NJM2535V
IC4105	409 394 9317	IC TC7SH14FU(TE85L)
IC4145	409 461 7314	IC AD8057ART-REEL7
IC5001	409 438 5510	IC TC4052BFT
IC5002	409 271 7323	IC TC4W66F-TE12L
IC5301	409 434 8119	IC TC4053BFT-(EL)
IC5302	409 434 8119	IC TC4053BFT-(EL)
IC5303	410 343 7008	IC SN74AHCT1G14DBVR
IC5304	409 484 2013	IC BA7078AF-E2
IC5306	410 482 0908	IC SN74AHCT1G126DCK
IC5307	410 482 0908	IC SN74AHCT1G126DCK
IC5308	410 349 4100	IC TC7W241FU(TE12L)
IC5312	409 461 7314	IC AD8057ART-REEL7
IC7302	409 394 9317	IC TC7SH14FU(TE85L)
IC7303	409 394 9317	IC TC7SH14FU(TE85L)

Electrical Parts List

Key No.	Part No.	Description		
CAPACITOR				
C1001	403 164 0214	CERAMIC	0.1U Z	25V
C1002	403 283 6319	CERAMIC	1U Z	10V
C1003	403 329 2411	CERAMIC	22U Z	10V
C1004	403 157 4212	CERAMIC	220P J	50V
C1006	403 164 0214	CERAMIC	0.1U Z	25V
C1007	403 164 0214	CERAMIC	0.1U Z	25V
C1008	403 164 0214	CERAMIC	0.1U Z	25V
C1009	403 397 6212	ELECT	10U M	16V
C1011	403 397 6212	ELECT	10U M	16V
C1016	403 157 3611	CERAMIC	100P J	50V
C1017	403 157 3611	CERAMIC	100P J	50V
C1018	403 157 3611	CERAMIC	100P J	50V
C1019	403 157 3611	CERAMIC	100P J	50V
C1021	403 397 6212	ELECT	10U M	16V
C1022	403 164 0214	CERAMIC	0.1U Z	25V
C1023	403 164 0214	CERAMIC	0.1U Z	25V
C1024	403 397 6212	ELECT	10U M	16V
C1204	403 164 0214	CERAMIC	0.1U Z	25V
C1206	403 164 0214	CERAMIC	0.1U Z	25V
C1207	403 164 0214	CERAMIC	0.1U Z	25V
C1209	403 164 0214	CERAMIC	0.1U Z	25V
C1211	403 164 0214	CERAMIC	0.1U Z	25V
C1212	403 164 0214	CERAMIC	0.1U Z	25V
C1213	403 164 0214	CERAMIC	0.1U Z	25V
C1216	403 164 0214	CERAMIC	0.1U Z	25V
C1217	403 164 0214	CERAMIC	0.1U Z	25V
C1222	403 164 0214	CERAMIC	0.1U Z	25V
C1223	403 164 0214	CERAMIC	0.1U Z	25V
C1224	403 164 0214	CERAMIC	0.1U Z	25V
C1226	403 283 6319	CERAMIC	1U Z	10V
C1227	403 164 0214	CERAMIC	0.1U Z	25V
C1228	403 164 0214	CERAMIC	0.1U Z	25V
C1229	403 164 0214	CERAMIC	0.1U Z	25V
C1231	403 157 3116	CERAMIC	56P J	50V
C1232	403 157 3116	CERAMIC	56P J	50V
C1233	403 157 3116	CERAMIC	56P J	50V
C1234	403 164 0214	CERAMIC	0.1U Z	25V
C1236	403 164 0214	CERAMIC	0.1U Z	25V
C2004	403 164 0214	CERAMIC	0.1U Z	25V
C2006	403 164 0214	CERAMIC	0.1U Z	25V
C2013	403 157 3611	CERAMIC	100P J	50V
C2014	403 157 3611	CERAMIC	100P J	50V
C2016	403 164 0214	CERAMIC	0.1U Z	25V
C2017	403 164 0214	CERAMIC	0.1U Z	25V
C2018	403 164 0214	CERAMIC	0.1U Z	25V
C2019	403 235 0112	CERAMIC	39P J	50V
C2021	403 155 1619	CERAMIC	33P J	50V
C2022	403 235 0112	CERAMIC	39P J	50V
C2023	403 155 1619	CERAMIC	33P J	50V
C3003	403 164 0214	CERAMIC	0.1U Z	25V
C3004	403 397 5710	ELECT	100U M	10V
C3006	403 164 0214	CERAMIC	0.1U Z	25V
C3007	403 347 3513	OS-SOLID	120U M	10V
C3008	403 164 0214	CERAMIC	0.1U Z	25V
C3009	403 357 7112	OS-SOLID	47U M	10V
C3011	403 164 0214	CERAMIC	0.1U Z	25V
C3012	403 357 7112	OS-SOLID	47U M	10V
C3013	403 164 0214	CERAMIC	0.1U Z	25V
C3801	403 283 6319	CERAMIC	1U Z	10V
C3802	403 283 6319	CERAMIC	1U Z	10V
C3803	403 283 6319	CERAMIC	1U Z	10V
C3804	403 283 6319	CERAMIC	1U Z	10V
C3806	403 283 6319	CERAMIC	1U Z	10V
C3807	403 329 2411	CERAMIC	22U Z	10V
C3808	403 164 0214	CERAMIC	0.1U Z	25V
C3809	403 283 6319	CERAMIC	1U Z	10V
C3811	403 164 0214	CERAMIC	0.1U Z	25V
C3812	403 283 6319	CERAMIC	1U Z	10V
C3813	403 164 0214	CERAMIC	0.1U Z	25V
C3814	403 164 0214	CERAMIC	0.1U Z	25V
C4101	403 164 0214	CERAMIC	0.1U Z	25V
C4102	403 348 5823	CERAMIC	0.47U K	10V
C4103	403 348 5823	CERAMIC	0.47U K	10V
C4104	403 348 5823	CERAMIC	0.47U K	10V
C4106	403 348 5823	CERAMIC	0.47U K	10V
C4107	403 348 5823	CERAMIC	0.47U K	10V
C4108	403 149 9218	CERAMIC	0.01U Z	50V
C4109	403 323 1311	CERAMIC	0.47U Z	10V
C4111	403 164 0214	CERAMIC	0.1U Z	25V
C4112	403 323 1311	CERAMIC	0.47U Z	10V
C4114	403 348 5823	CERAMIC	0.47U K	10V
C4116	403 348 5823	CERAMIC	0.47U K	10V
C4117	403 348 5823	CERAMIC	0.47U K	10V
C4118	403 348 5823	CERAMIC	0.47U K	10V
C4119	403 348 5823	CERAMIC	0.47U K	10V
C4127	403 157 2515	CERAMIC	27P J	50V
C4128	403 157 2515	CERAMIC	27P J	50V
C4129	403 157 2515	CERAMIC	27P J	50V
C4131	403 348 5823	CERAMIC	0.47U K	10V
C4132	403 348 5823	CERAMIC	0.47U K	10V
C4133	403 348 5823	CERAMIC	0.47U K	10V
C4134	403 149 9218	CERAMIC	0.01U Z	50V
C4136	403 149 9218	CERAMIC	0.01U Z	50V
C4137	403 149 9218	CERAMIC	0.01U Z	50V
C4138	403 149 9218	CERAMIC	0.01U Z	50V
C4139	403 149 9218	CERAMIC	0.01U Z	50V
C4141	403 149 9218	CERAMIC	0.01U Z	50V
C4142	403 149 9218	CERAMIC	0.01U Z	50V
C4143	403 323 1311	CERAMIC	0.47U Z	10V
C4145	403 145 9915	CERAMIC	22P J	50V
C4146	403 215 2211	CERAMIC	0.01U K	50V
C4147	403 283 6319	CERAMIC	1U Z	10V
C4149	403 215 2211	CERAMIC	0.01U K	50V
C4151	403 155 4214	CERAMIC	15P J	50V
C4152	403 164 0214	CERAMIC	0.1U Z	25V
C4153	403 164 0214	CERAMIC	0.1U Z	25V
C4154	403 164 0214	CERAMIC	0.1U Z	25V
C4155	403 164 0214	CERAMIC	0.1U Z	25V
C4156	403 164 0214	CERAMIC	0.1U Z	25V
C4163	403 397 6212	ELECT	10U M	16V
C4164	403 397 6212	ELECT	10U M	16V
C4166	403 164 0214	CERAMIC	0.1U Z	25V
C4167	403 378 6415	CERAMIC	10U Z	16V
C4168	403 397 6212	ELECT	10U M	16V
C4169	403 164 0214	CERAMIC	0.1U Z	25V
C5001	403 323 8815	CERAMIC	2.2U Z	16V
C5002	403 323 8815	CERAMIC	2.2U Z	16V
C5003	403 323 8815	CERAMIC	2.2U Z	16V
C5004	403 378 6415	CERAMIC	10U Z	16V
C5006	403 323 8815	CERAMIC	2.2U Z	16V
C5007	403 323 8815	CERAMIC	2.2U Z	16V
C5008	403 323 8815	CERAMIC	2.2U Z	16V
C5009	403 323 1311	CERAMIC	0.47U Z	10V
C5011	403 329 2411	CERAMIC	22U Z	10V
C5012	403 164 0214	CERAMIC	0.1U Z	25V
C5013	403 164 0214	CERAMIC	0.1U Z	25V
C5014	403 391 5518	ELECT	10U M	16V
C5016	403 391 5518	ELECT	10U M	16V
C5017	403 164 0214	CERAMIC	0.1U Z	25V
C5301	403 164 0214	CERAMIC	0.1U Z	25V
C5302	403 164 0214	CERAMIC	0.1U Z	25V
C5303	403 164 0214	CERAMIC	0.1U Z	25V
C5304	403 164 0214	CERAMIC	0.1U Z	25V

Electrical Parts List

Key No.	Part No.	Description
C5306	403 164 0214	CERAMIC 0.1U Z 25V
C5307	403 164 0214	CERAMIC 0.1U Z 25V
C5308	403 164 0214	CERAMIC 0.1U Z 25V
C5309	403 348 5823	CERAMIC 0.47U K 10V
C5311	403 283 6319	CERAMIC 1U Z 10V
C5313	403 283 6319	CERAMIC 1U Z 10V
C5317	403 164 0214	CERAMIC 0.1U Z 25V
C5318	403 298 9619	CERAMIC 0.1U K 16V
	403 325 3313	CERAMIC 0.1U K 16V
C5319	403 364 5811	CERAMIC 1U K 10V
C5322	403 314 5915	CERAMIC 0.47U K 16V
C5323	403 355 9910	CERAMIC 2.2U K 10V
C5324	403 364 5811	CERAMIC 1U K 10V
C5326	403 157 3611	CERAMIC 100P J 50V
C5327	403 164 0214	CERAMIC 0.1U Z 25V
C5328	403 164 0214	CERAMIC 0.1U Z 25V
C5329	403 164 0214	CERAMIC 0.1U Z 25V
C5331	403 164 0214	CERAMIC 0.1U Z 25V
C5333	403 149 9218	CERAMIC 0.01U Z 50V
C5336	403 164 0214	CERAMIC 0.1U Z 25V
C5337	403 164 0214	CERAMIC 0.1U Z 25V
C5338	403 355 9910	CERAMIC 2.2U K 10V
C5339	403 155 1312	CERAMIC 150P J 50V
C5341	403 113 3815	CERAMIC 1000P K 50V
C5342	403 283 6319	CERAMIC 1U Z 10V
C7301	403 164 0214	CERAMIC 0.1U Z 25V
C7306	403 164 0214	CERAMIC 0.1U Z 25V
C7311	403 323 1311	CERAMIC 0.47U Z 10V
C7312	403 396 5513	ELECT 470U M 16V
C7313	403 233 3818	CERAMIC 10P C 50V
C7314	403 341 3915	POS-SOLID 100U M 6.3V
RESISTOR		
R1001	401 260 4112	MT-GLAZE 75 JA 1/3W
R1006	401 260 4112	MT-GLAZE 75 JA 1/3W
R1011	401 260 4112	MT-GLAZE 75 JA 1/3W
R1016	401 105 0415	MT-GLAZE 100 JA 1/16W
R1017	401 105 0415	MT-GLAZE 100 JA 1/16W
R1018	401 105 0415	MT-GLAZE 100 JA 1/16W
R1019	401 105 0415	MT-GLAZE 100 JA 1/16W
R1021	401 105 5410	MT-GLAZE 47K JA 1/16W
R1022	401 105 0415	MT-GLAZE 100 JA 1/16W
R1023	401 105 5410	MT-GLAZE 47K JA 1/16W
R1031	401 113 4412	MT-GLAZE 75 JA 1/16W
R1032	401 113 4412	MT-GLAZE 75 JA 1/16W
R1033	401 113 4412	MT-GLAZE 75 JA 1/16W
R1034	401 105 2815	MT-GLAZE 2.2K JA 1/16W
R1036	401 105 2716	MT-GLAZE 220 JA 1/16W
R1037	401 105 2815	MT-GLAZE 2.2K JA 1/16W
R1038	401 105 2716	MT-GLAZE 220 JA 1/16W
R1039	401 105 2815	MT-GLAZE 2.2K JA 1/16W
R1041	401 105 2716	MT-GLAZE 220 JA 1/16W
R1042	401 105 7919	MT-GLAZE 0.000 ZA 1/16W
R1043	401 105 2716	MT-GLAZE 220 JA 1/16W
R1044	401 105 7919	MT-GLAZE 0.000 ZA 1/16W
R1046	401 105 2716	MT-GLAZE 220 JA 1/16W
R1051	401 105 2815	MT-GLAZE 2.2K JA 1/16W
R1052	401 105 2716	MT-GLAZE 220 JA 1/16W
R1054	401 105 2815	MT-GLAZE 2.2K JA 1/16W
R1056	401 105 2716	MT-GLAZE 220 JA 1/16W
R1057	401 105 2815	MT-GLAZE 2.2K JA 1/16W
R1058	401 105 2716	MT-GLAZE 220 JA 1/16W
R1059	401 105 7919	MT-GLAZE 0.000 ZA 1/16W
R1061	401 105 2716	MT-GLAZE 220 JA 1/16W
R1062	401 105 7919	MT-GLAZE 0.000 ZA 1/16W
R1063	401 105 2716	MT-GLAZE 220 JA 1/16W
R1064	401 105 0415	MT-GLAZE 100 JA 1/16W
R1066	401 105 7919	MT-GLAZE 0.000 ZA 1/16W
R1067	401 105 0415	MT-GLAZE 100 JA 1/16W
R1068	401 105 0415	MT-GLAZE 100 JA 1/16W
R1069	401 260 4112	MT-GLAZE 75 JA 1/3W
R1071	401 105 7919	MT-GLAZE 0.000 ZA 1/16W
R1072	401 260 4112	MT-GLAZE 75 JA 1/3W
R1073	401 105 7919	MT-GLAZE 0.000 ZA 1/16W
R1074	401 260 4112	MT-GLAZE 75 JA 1/3W
R1075	401 105 0415	MT-GLAZE 100 JA 1/16W
R1076	401 105 7919	MT-GLAZE 0.000 ZA 1/16W
R1078	401 105 5410	MT-GLAZE 47K JA 1/16W
R1079	401 105 5410	MT-GLAZE 47K JA 1/16W
R1082	401 105 0415	MT-GLAZE 100 JA 1/16W
R1083	401 105 5519	MT-GLAZE 470K JA 1/16W
R1084	401 105 5519	MT-GLAZE 470K JA 1/16W
R1086	401 105 5519	MT-GLAZE 470K JA 1/16W
R1087	401 105 5519	MT-GLAZE 470K JA 1/16W
R1088	401 105 7919	MT-GLAZE 0.000 ZA 1/16W
R1089	401 105 7919	MT-GLAZE 0.000 ZA 1/16W
R1091	401 105 7919	MT-GLAZE 0.000 ZA 1/16W
R1092	401 105 7919	MT-GLAZE 0.000 ZA 1/16W
R1093	401 105 1511	MT-GLAZE 1.5K JA 1/16W
R1094	401 105 1511	MT-GLAZE 1.5K JA 1/16W
R1096	401 105 1511	MT-GLAZE 1.5K JA 1/16W
R1097	401 105 1511	MT-GLAZE 1.5K JA 1/16W
R1201	401 105 0415	MT-GLAZE 100 JA 1/16W
R1202	401 105 0415	MT-GLAZE 100 JA 1/16W
R1203	401 105 0415	MT-GLAZE 100 JA 1/16W
R1204	401 105 0415	MT-GLAZE 100 JA 1/16W
R1206	401 105 0415	MT-GLAZE 100 JA 1/16W
R1207	401 105 0415	MT-GLAZE 100 JA 1/16W
R1208	401 105 0613	MT-GLAZE 10K JA 1/16W
R1209	401 105 0415	MT-GLAZE 100 JA 1/16W
R1212	401 105 7919	MT-GLAZE 0.000 ZA 1/16W
R1213	401 105 1313	MT-GLAZE 15 JA 1/16W
R1214	401 105 1313	MT-GLAZE 15 JA 1/16W
R1216	401 105 1313	MT-GLAZE 15 JA 1/16W
R1217	401 105 0613	MT-GLAZE 10K JA 1/16W
R1218	401 105 0613	MT-GLAZE 10K JA 1/16W
R1219	401 105 0613	MT-GLAZE 10K JA 1/16W
R1221	401 105 0613	MT-GLAZE 10K JA 1/16W
R1226	401 105 0514	MT-GLAZE 1K JA 1/16W
R1231	401 105 0415	MT-GLAZE 100 JA 1/16W
R1232	401 105 0415	MT-GLAZE 100 JA 1/16W
R1233	401 105 0415	MT-GLAZE 100 JA 1/16W
R1234	401 105 0613	MT-GLAZE 10K JA 1/16W
R1236	401 105 0613	MT-GLAZE 10K JA 1/16W
R1237	401 105 0613	MT-GLAZE 10K JA 1/16W
R1238	401 105 0514	MT-GLAZE 1K JA 1/16W
R1239	401 105 0613	MT-GLAZE 10K JA 1/16W
R2001	401 260 4112	MT-GLAZE 75 JA 1/3W
R2002	401 260 4112	MT-GLAZE 75 JA 1/3W
R2003	401 260 4112	MT-GLAZE 75 JA 1/3W
R2004	401 105 7919	MT-GLAZE 0.000 ZA 1/16W
R2006	401 105 7919	MT-GLAZE 0.000 ZA 1/16W
R2007	401 105 7919	MT-GLAZE 0.000 ZA 1/16W
R2008	401 105 7919	MT-GLAZE 0.000 ZA 1/16W
R2009	401 105 2815	MT-GLAZE 2.2K JA 1/16W
R2011	401 105 7919	MT-GLAZE 0.000 ZA 1/16W
R2012	401 105 2815	MT-GLAZE 2.2K JA 1/16W
R2013	401 105 7919	MT-GLAZE 0.000 ZA 1/16W
R2014	401 105 2815	MT-GLAZE 2.2K JA 1/16W
R2023	401 105 7919	MT-GLAZE 0.000 ZA 1/16W
R2024	401 260 4112	MT-GLAZE 75 JA 1/3W
R2026	401 105 7919	MT-GLAZE 0.000 ZA 1/16W
R2027	401 260 4112	MT-GLAZE 75 JA 1/3W
R2028	401 105 7919	MT-GLAZE 0.000 ZA 1/16W
R2029	401 105 2815	MT-GLAZE 2.2K JA 1/16W

Electrical Parts List

Key No.	Part No.	Description
R2031	401 105 7919	MT-GLAZE 0.000 ZA 1/16W
R2032	401 105 2815	MT-GLAZE 2.2K JA 1/16W
R2033	401 105 5519	MT-GLAZE 470K JA 1/16W
R2034	401 105 0415	MT-GLAZE 100 JA 1/16W
R2036	401 105 0415	MT-GLAZE 100 JA 1/16W
R2037	401 105 5519	MT-GLAZE 470K JA 1/16W
R2038	401 105 6516	MT-GLAZE 680 JA 1/16W
R2039	401 105 6516	MT-GLAZE 680 JA 1/16W
R3001	401 105 0613	MT-GLAZE 10K JA 1/16W
R3002	401 105 0415	MT-GLAZE 100 JA 1/16W
R3004	401 105 0415	MT-GLAZE 100 JA 1/16W
R3006	401 105 2815	MT-GLAZE 2.2K JA 1/16W
R3007	401 105 7919	MT-GLAZE 0.000 ZA 1/16W
R3012	401 105 7919	MT-GLAZE 0.000 ZA 1/16W
R3801	401 105 7919	MT-GLAZE 0.000 ZA 1/16W
R3802	401 105 0415	MT-GLAZE 100 JA 1/16W
R3803	401 105 0415	MT-GLAZE 100 JA 1/16W
R3804	401 105 0415	MT-GLAZE 100 JA 1/16W
R3805	401 105 0415	MT-GLAZE 100 JA 1/16W
R3806	401 105 0613	MT-GLAZE 10K JA 1/16W
R3807	401 105 0415	MT-GLAZE 100 JA 1/16W
R3809	401 105 1511	MT-GLAZE 1.5K JA 1/16W
R3811	401 105 0514	MT-GLAZE 1K JA 1/16W
R3813	401 105 0415	MT-GLAZE 100 JA 1/16W
R3814	401 105 0415	MT-GLAZE 100 JA 1/16W
R3816	401 105 0415	MT-GLAZE 100 JA 1/16W
R3817	401 105 0415	MT-GLAZE 100 JA 1/16W
R3818	401 105 2914	MT-GLAZE 22K JA 1/16W
R3819	401 105 2914	MT-GLAZE 22K JA 1/16W
R3821	401 105 2914	MT-GLAZE 22K JA 1/16W
R3822	401 105 2914	MT-GLAZE 22K JA 1/16W
R3823	401 105 7919	MT-GLAZE 0.000 ZA 1/16W
R3824	401 105 7919	MT-GLAZE 0.000 ZA 1/16W
R3826	401 105 0613	MT-GLAZE 10K JA 1/16W
R3827	401 105 0613	MT-GLAZE 10K JA 1/16W
R3828	401 105 2815	MT-GLAZE 2.2K JA 1/16W
R3829	401 105 5410	MT-GLAZE 47K JA 1/16W
R3831	401 105 0613	MT-GLAZE 10K JA 1/16W
R3832	401 105 7919	MT-GLAZE 0.000 ZA 1/16W
R3833	401 105 7919	MT-GLAZE 0.000 ZA 1/16W
R3834	401 105 7919	MT-GLAZE 0.000 ZA 1/16W
R3836	401 105 7919	MT-GLAZE 0.000 ZA 1/16W
R3837	401 105 7919	MT-GLAZE 0.000 ZA 1/16W
R3838	401 105 7919	MT-GLAZE 0.000 ZA 1/16W
R3839	401 105 2914	MT-GLAZE 22K JA 1/16W
R3841	401 105 2914	MT-GLAZE 22K JA 1/16W
R3842	401 105 2914	MT-GLAZE 22K JA 1/16W
R3843	401 105 0613	MT-GLAZE 10K JA 1/16W
R3844	401 105 0613	MT-GLAZE 10K JA 1/16W
R3846	401 105 0613	MT-GLAZE 10K JA 1/16W
R3847	401 105 0613	MT-GLAZE 10K JA 1/16W
R3848	401 105 7919	MT-GLAZE 0.000 ZA 1/16W
R3849	401 105 7919	MT-GLAZE 0.000 ZA 1/16W
R3851	401 105 0613	MT-GLAZE 10K JA 1/16W
R3853	401 105 0613	MT-GLAZE 10K JA 1/16W
R3854	401 105 0613	MT-GLAZE 10K JA 1/16W
R3856	401 105 0415	MT-GLAZE 100 JA 1/16W
R3857	401 105 0415	MT-GLAZE 100 JA 1/16W
R3858	401 105 7919	MT-GLAZE 0.000 ZA 1/16W
R3859	401 105 7919	MT-GLAZE 0.000 ZA 1/16W
R3861	401 105 7919	MT-GLAZE 0.000 ZA 1/16W
R3862	401 105 2815	MT-GLAZE 2.2K JA 1/16W
R3863	401 105 7919	MT-GLAZE 0.000 ZA 1/16W
R3864	401 105 0613	MT-GLAZE 10K JA 1/16W
R3866	401 105 0613	MT-GLAZE 10K JA 1/16W
R4101	401 105 4611	MT-GLAZE 3.9K JA 1/16W
R4102	401 105 8015	MT-GLAZE 1M JA 1/16W
R4103	401 105 0514	MT-GLAZE 1K JA 1/16W
R4104	401 105 4611	MT-GLAZE 3.9K JA 1/16W
R4105	401 105 3010	MT-GLAZE 220K JA 1/16W
R4106	401 105 8015	MT-GLAZE 1M JA 1/16W
R4107	401 105 0514	MT-GLAZE 1K JA 1/16W
R4108	401 105 4611	MT-GLAZE 3.9K JA 1/16W
R4109	401 105 8015	MT-GLAZE 1M JA 1/16W
R4111	401 105 0514	MT-GLAZE 1K JA 1/16W
R4112	401 105 5816	MT-GLAZE 56 JA 1/16W
R4113	401 105 5816	MT-GLAZE 56 JA 1/16W
R4114	401 105 5816	MT-GLAZE 56 JA 1/16W
R4115	401 105 1016	MT-GLAZE 1.2K JA 1/16W
R4116	401 105 5816	MT-GLAZE 56 JA 1/16W
R4117	401 105 5816	MT-GLAZE 56 JA 1/16W
R4118	401 105 5816	MT-GLAZE 56 JA 1/16W
R4119	401 105 5816	MT-GLAZE 56 JA 1/16W
R4121	401 105 5816	MT-GLAZE 56 JA 1/16W
R4122	401 105 5816	MT-GLAZE 56 JA 1/16W
R4123	401 105 5816	MT-GLAZE 56 JA 1/16W
R4124	401 105 5816	MT-GLAZE 56 JA 1/16W
R4125	401 105 1115	MT-GLAZE 12K JA 1/16W
R4126	401 105 5816	MT-GLAZE 56 JA 1/16W
R4127	401 105 3317	MT-GLAZE 2.7K JA 1/16W
R4128	401 105 2716	MT-GLAZE 220 JA 1/16W
R4129	401 202 4019	MT-GLAZE 10K FA 1/16W
R4130	401 105 7919	MT-GLAZE 0.000 ZA 1/16W
R4131	401 105 0316	MT-GLAZE 10 JA 1/16W
R4132	401 105 0316	MT-GLAZE 10 JA 1/16W
R4133	401 113 4917	MT-GLAZE 200 JA 1/16W
R4134	401 105 0514	MT-GLAZE 1K JA 1/16W
R4136	401 105 7919	MT-GLAZE 0.000 ZA 1/16W
R4137	401 105 7919	MT-GLAZE 0.000 ZA 1/16W
R4138	401 105 7919	MT-GLAZE 0.000 ZA 1/16W
R4139	401 105 0415	MT-GLAZE 100 JA 1/16W
R4141	401 105 0415	MT-GLAZE 100 JA 1/16W
R4142	401 037 1917	MT-GLAZE 680 JA 1/8W
R4146	401 037 1917	MT-GLAZE 680 JA 1/8W
R4149	401 105 6516	MT-GLAZE 680 JA 1/16W
R4151	401 105 7919	MT-GLAZE 0.000 ZA 1/16W
R4154	401 105 5816	MT-GLAZE 56 JA 1/16W
R4156	401 105 5816	MT-GLAZE 56 JA 1/16W
R4157	401 105 5816	MT-GLAZE 56 JA 1/16W
R4158	401 105 5816	MT-GLAZE 56 JA 1/16W
R4159	401 105 5816	MT-GLAZE 56 JA 1/16W
R4162	401 105 7919	MT-GLAZE 0.000 ZA 1/16W
R4163	401 105 2815	MT-GLAZE 2.2K JA 1/16W
R4164	401 105 7919	MT-GLAZE 0.000 ZA 1/16W
R4166	401 105 0613	MT-GLAZE 10K JA 1/16W
R4167	401 105 0613	MT-GLAZE 10K JA 1/16W
R4168	401 105 0613	MT-GLAZE 10K JA 1/16W
R4169	401 105 0613	MT-GLAZE 10K JA 1/16W
R4171	401 105 7919	MT-GLAZE 0.000 ZA 1/16W
R4172	401 105 7919	MT-GLAZE 0.000 ZA 1/16W
R4173	401 105 7919	MT-GLAZE 0.000 ZA 1/16W
R4174	401 105 4710	MT-GLAZE 39K JA 1/16W
R4176	401 105 3416	MT-GLAZE 27K JA 1/16W
R4177	401 035 4910	MT-GLAZE 1K JA 1/8W
R4178	401 105 6110	MT-GLAZE 560K JA 1/16W
R4179	401 105 6110	MT-GLAZE 560K JA 1/16W
R4181	401 105 6110	MT-GLAZE 560K JA 1/16W
R4182	401 105 6110	MT-GLAZE 560K JA 1/16W
R4183	401 105 8015	MT-GLAZE 1M JA 1/16W
R4184	401 105 8015	MT-GLAZE 1M JA 1/16W
R4186	401 105 8015	MT-GLAZE 1M JA 1/16W
R5001	401 105 4116	MT-GLAZE 3.3K JA 1/16W
R5002	401 105 4116	MT-GLAZE 3.3K JA 1/16W
R5003	401 105 0415	MT-GLAZE 100 JA 1/16W

Electrical Parts List

Key No.	Part No.	Description
R5004	401 105 0415	MT-GLAZE 100 JA 1/16W
R5006	401 035 4118	MT-GLAZE 0.000 ZA 1/8W
R5007	401 105 2013	MT-GLAZE 1.8K JA 1/16W
R5008	401 105 7919	MT-GLAZE 0.000 ZA 1/16W
R5009	401 105 0415	MT-GLAZE 100 JA 1/16W
R5011	401 105 0415	MT-GLAZE 100 JA 1/16W
R5012	401 105 2013	MT-GLAZE 1.8K JA 1/16W
R5013	401 105 7919	MT-GLAZE 0.000 ZA 1/16W
R5014	401 105 0415	MT-GLAZE 100 JA 1/16W
R5016	401 105 0415	MT-GLAZE 100 JA 1/16W
R5017	401 105 2815	MT-GLAZE 2.2K JA 1/16W
R5018	401 105 2815	MT-GLAZE 2.2K JA 1/16W
R5019	401 105 0415	MT-GLAZE 100 JA 1/16W
R5020	401 105 0613	MT-GLAZE 10K JA 1/16W
R5022	401 105 0613	MT-GLAZE 10K JA 1/16W
R5023	401 105 0613	MT-GLAZE 10K JA 1/16W
R5024	401 105 0613	MT-GLAZE 10K JA 1/16W
R5025	401 105 0613	MT-GLAZE 10K JA 1/16W
R5026	401 105 5212	MT-GLAZE 470 JA 1/16W
R5027	401 105 7919	MT-GLAZE 0.000 ZA 1/16W
R5028	401 105 7919	MT-GLAZE 0.000 ZA 1/16W
R5029	401 105 0613	MT-GLAZE 10K JA 1/16W
R5301	401 105 0514	MT-GLAZE 1K JA 1/16W
R5302	401 105 0514	MT-GLAZE 1K JA 1/16W
R5304	401 105 2815	MT-GLAZE 2.2K JA 1/16W
R5306	401 105 0316	MT-GLAZE 10 JA 1/16W
R5307	401 105 2013	MT-GLAZE 1.8K JA 1/16W
R5308	401 105 2013	MT-GLAZE 1.8K JA 1/16W
R5309	401 105 7919	MT-GLAZE 0.000 ZA 1/16W
R5311	401 105 7919	MT-GLAZE 0.000 ZA 1/16W
R5312	401 105 2013	MT-GLAZE 1.8K JA 1/16W
R5313	401 105 0316	MT-GLAZE 10 JA 1/16W
R5314	401 105 2013	MT-GLAZE 1.8K JA 1/16W
R5316	401 105 0415	MT-GLAZE 100 JA 1/16W
R5317	401 105 1313	MT-GLAZE 15 JA 1/16W
R5318	401 105 1313	MT-GLAZE 15 JA 1/16W
R5320	401 105 2716	MT-GLAZE 220 JA 1/16W
R5323	401 105 0415	MT-GLAZE 100 JA 1/16W
R5324	401 105 3119	MT-GLAZE 27 JA 1/16W
R5328	401 105 1917	MT-GLAZE 180 JA 1/16W
R5329	401 105 8114	MT-GLAZE 56K JA 1/16W
R5331	401 105 0415	MT-GLAZE 100 JA 1/16W
R5332	401 035 4118	MT-GLAZE 0.000 ZA 1/8W
R5337	401 105 0415	MT-GLAZE 100 JA 1/16W
R5344	401 105 3317	MT-GLAZE 2.7K JA 1/16W
R5346	401 105 3317	MT-GLAZE 2.7K JA 1/16W
R5347	401 105 1412	MT-GLAZE 150 JA 1/16W
R5349	401 105 1412	MT-GLAZE 150 JA 1/16W
R5351	401 105 0415	MT-GLAZE 100 JA 1/16W
R5352	401 105 8015	MT-GLAZE 1M JA 1/16W
R5354	401 105 4611	MT-GLAZE 3.9K JA 1/16W
R5356	401 105 0415	MT-GLAZE 100 JA 1/16W
R5357	401 105 0415	MT-GLAZE 100 JA 1/16W
R5358	401 105 7919	MT-GLAZE 0.000 ZA 1/16W
R5359	401 105 0613	MT-GLAZE 10K JA 1/16W
R5361	401 105 7919	MT-GLAZE 0.000 ZA 1/16W
R5362	401 105 7919	MT-GLAZE 0.000 ZA 1/16W
R5363	401 105 7919	MT-GLAZE 0.000 ZA 1/16W
R5371	401 105 0613	MT-GLAZE 10K JA 1/16W
R5372	401 105 0613	MT-GLAZE 10K JA 1/16W
R5373	401 105 0613	MT-GLAZE 10K JA 1/16W
R5374	401 105 0613	MT-GLAZE 10K JA 1/16W
R5376	401 105 0514	MT-GLAZE 1K JA 1/16W
R5377	401 105 1511	MT-GLAZE 1.5K JA 1/16W
R5378	401 105 0613	MT-GLAZE 10K JA 1/16W
R5379	401 105 0613	MT-GLAZE 10K JA 1/16W
R7305	401 105 0316	MT-GLAZE 10 JA 1/16W
R7308	401 105 0514	MT-GLAZE 1K JA 1/16W
R7310	401 105 0316	MT-GLAZE 10 JA 1/16W
RB5001	645 021 0365	R-NETWORK 100KX4 0.063W
	645 025 5397	R-NETWORK 100KX4 1/16W
RB5002	645 021 0365	R-NETWORK 100KX4 0.063W
	645 025 5397	R-NETWORK 100KX4 1/16W
COIL		
L1001	645 044 8850	FILTER,EMI 400MHZ
L1002	645 044 8850	FILTER,EMI 400MHZ
L1003	645 044 8850	FILTER,EMI 400MHZ
L1004	645 044 8850	FILTER,EMI 400MHZ
L1006	645 044 8850	FILTER,EMI 400MHZ
L1007	645 044 8850	FILTER,EMI 400MHZ
L1008	645 044 8843	FILTER,EMI 200MHZ
L1009	645 044 8843	FILTER,EMI 200MHZ
L1011	645 044 8850	FILTER,EMI 400MHZ
L1012	645 044 8850	FILTER,EMI 400MHZ
L1013	645 044 8850	FILTER,EMI 400MHZ
L1014	645 044 8843	FILTER,EMI 200MHZ
L1016	645 044 8843	FILTER,EMI 200MHZ
L1017	645 045 6183	FILTER,EMI 25MHZ
L1018	645 045 6183	FILTER,EMI 25MHZ
L1019	645 045 6183	FILTER,EMI 25MHZ
L1021	645 045 6183	FILTER,EMI 25MHZ
L1022	645 045 6183	FILTER,EMI 25MHZ
L1023	645 045 6183	FILTER,EMI 25MHZ
L1024	645 045 6183	FILTER,EMI 25MHZ
L1026	645 045 6183	FILTER,EMI 25MHZ
L1027	645 045 6183	FILTER,EMI 25MHZ
L1028	645 045 6183	FILTER,EMI 25MHZ
L1031	645 045 6183	FILTER,EMI 25MHZ
L1034	645 050 8448	IMPEDANCE,1000 OHM P
L1035	645 050 8448	IMPEDANCE,1000 OHM P
L1201	645 026 0964	INDUCTOR,10U K
L2001	645 044 8836	FILTER,EMI 100MHZ
L2002	645 044 8836	FILTER,EMI 100MHZ
L2003	645 044 8836	FILTER,EMI 100MHZ
L2004	645 044 8836	FILTER,EMI 100MHZ
L2005	645 050 8448	IMPEDANCE,1000 OHM P
L2006	645 044 8836	FILTER,EMI 100MHZ
L2008	645 045 6183	FILTER,EMI 25MHZ
L2009	645 045 6183	FILTER,EMI 25MHZ
L2011	645 026 1039	INDUCTOR,6.8U M
L2012	645 026 1039	INDUCTOR,6.8U M
L2014	645 050 8448	IMPEDANCE,1000 OHM P
L2031	645 050 8448	IMPEDANCE,1000 OHM P
L3001	645 045 6183	FILTER,EMI 25MHZ
L3002	645 045 6183	FILTER,EMI 25MHZ
L4101	645 050 8448	IMPEDANCE,1000 OHM P
L4105	645 050 8448	IMPEDANCE,1000 OHM P
L5301	645 050 8448	IMPEDANCE,1000 OHM P
L7301	645 050 8448	IMPEDANCE,1000 OHM P
L7302	645 050 8448	IMPEDANCE,1000 OHM P
DIODE		
D1001	407 206 6318	ZD UDZS-TE-175.1B
D1002	407 206 6318	ZD UDZS-TE-175.1B
D1003	407 209 1211	ZD UDZS-TE-176.2B
D1007	407 209 1211	ZD UDZS-TE-176.2B
D1008	407 209 1211	ZD UDZS-TE-176.2B
D1009	407 218 7716	ZENER DIODE UDZS20B-TE-17
D1011	407 218 7716	ZENER DIODE UDZS20B-TE-17
D1013	407 218 7716	ZENER DIODE UDZS20B-TE-17
D1014	407 218 7716	ZENER DIODE UDZS20B-TE-17
D1016	407 149 0817	DIODE 1SS355-TE-17
D1017	407 149 0817	DIODE 1SS355-TE-17
D3001	407 209 1211	ZD UDZS-TE-176.2B
D3002	407 209 1211	ZD UDZS-TE-176.2B

Key No.	Part No.	Description
D3003	407 209 1211	ZD UDZS-TE-176.2B
D3801	407 149 0817	DIODE 1SS355-TE-17
D3802	407 149 0817	DIODE 1SS355-TE-17
D3803	407 149 0817	DIODE 1SS355-TE-17
D4101	407 149 0817	DIODE 1SS355-TE-17
D4102	407 149 0817	DIODE 1SS355-TE-17
D4104	407 092 9526	DIODE SB07-03C-TB
D5001	407 218 7419	ZENER DIODE UDZS15B-TE-17
D5002	407 218 7419	ZENER DIODE UDZS15B-TE-17
D5003	407 218 7419	ZENER DIODE UDZS15B-TE-17
D5004	407 218 7419	ZENER DIODE UDZS15B-TE-17
D5006	407 218 7419	ZENER DIODE UDZS15B-TE-17
D5007	407 218 7419	ZENER DIODE UDZS15B-TE-17
D5008	407 218 7419	ZENER DIODE UDZS15B-TE-17
D5009	407 149 0817	DIODE 1SS355-TE-17
D5011	407 149 0817	DIODE 1SS355-TE-17
D5012	407 149 0817	DIODE 1SS355-TE-17
D5301	407 149 0817	DIODE 1SS355-TE-17
D5302	407 149 0817	DIODE 1SS355-TE-17
D5311	407 224 6512	ZD UDZS4.7B-TE-17
D5312	407 224 6512	ZD UDZS4.7B-TE-17
D7308	407 149 0817	DIODE 1SS355-TE-17
D7309	407 206 6318	ZD UDZS-TE-175.1B
MISCELLANEOUS		
AU1001	645 034 8501	UNIT,REMOCON RECEIVER
IC3001	407 105 8700	PHOTO COUPLE PC113B
K10D	645 028 0382	SOCKET,USB 4P
K10E	645 000 2595	SOCKET,DIN 8P
K10F	645 048 4650	SOCKET,DVI 24P
K10G	645 000 2571	JACK,PHONE D8.0
K10H	645 000 2571	JACK,PHONE D8.0
K20A	645 041 3506	JACK,RCA-2
K20B	645 041 3537	JACK,RCA-3
K20D	610 010 8295	SOCKET,DIN 4P
K20H	645 000 2571	JACK,PHONE D8.0
K30A	645 009 8093	SOCKET,D-SUB 15P
K30B	645 036 5201	SOCKET,BNC 5P
SC1001	645 045 7449	SURGE-ABSORBER
SC1002	645 045 7449	SURGE-ABSORBER
SC1003	645 045 7449	SURGE-ABSORBER
SC1004	645 045 7449	SURGE-ABSORBER
SC1006	645 045 7449	SURGE-ABSORBER
SC1007	645 045 7449	SURGE-ABSORBER
SC1008	645 045 7449	SURGE-ABSORBER
SC1009	645 045 7449	SURGE-ABSORBER
SC1011	645 045 7449	SURGE-ABSORBER
SC1012	645 045 7449	SURGE-ABSORBER
SC1013	645 045 7449	SURGE-ABSORBER
SC1014	645 045 7449	SURGE-ABSORBER
SC1016	645 045 7449	SURGE-ABSORBER
SC1017	645 045 7449	SURGE-ABSORBER
SC2001	645 045 7449	SURGE-ABSORBER
SC2002	645 045 7449	SURGE-ABSORBER
SC2003	645 045 7449	SURGE-ABSORBER
SC2004	645 045 7449	SURGE-ABSORBER
SC2006	645 045 7449	SURGE-ABSORBER
SC2007	645 045 7449	SURGE-ABSORBER
SC2008	645 045 7449	SURGE-ABSORBER
SW1001	645 042 8197	SWITCH,PUSH 1P-1TX1
X3801	645 053 9114	OSC,CERAMIC 6.000MHZ
X3802	645 053 3877	OSC,CERAMIC 5.00MHZ
X4101	645 041 3841	OSC,CRYSTAL 4MHZ

I/F BOARD

610 318 8577 ASSY,PWB I/F ME5A

Key No.	Part No.	Description
INTEGRATED CIRCUIT		
IC7001	409 523 7016	IC PQ05VY3H3ZP
IC7002	409 523 7016	IC PQ05VY3H3ZP
IC7003	409 416 6416	IC BA033FP-E2
IC7004	409 499 1810	IC PQ018EZ01ZP
CAPACITOR		
C7001	403 397 5710	ELECT 100U M 10V
C7002	403 164 0214	CERAMIC 0.1U Z 25V
C7003	403 164 0214	CERAMIC 0.1U Z 25V
C7004	403 394 1319	ELECT 100U M 6.3V
C7009	403 397 6113	ELECT 22U M 10V
C7011	403 164 0214	CERAMIC 0.1U Z 25V
C7012	403 164 0214	CERAMIC 0.1U Z 25V
C7013	403 397 6113	ELECT 22U M 10V
C7014	403 164 0214	CERAMIC 0.1U Z 25V
C7016	403 397 5710	ELECT 100U M 10V
C7017	403 397 5710	ELECT 100U M 10V
C7018	403 164 0214	CERAMIC 0.1U Z 25V
C7019	403 164 0214	CERAMIC 0.1U Z 25V
C7021	403 164 0214	CERAMIC 0.1U Z 25V
C7022	403 394 1319	ELECT 100U M 6.3V
C7023	403 394 1319	ELECT 100U M 6.3V
RESISTOR		
R7001	401 105 0415	MT-GLAZE 100 JA 1/16W
R7002	401 105 0415	MT-GLAZE 100 JA 1/16W
R7003	401 105 0415	MT-GLAZE 100 JA 1/16W
R7004	401 105 0415	MT-GLAZE 100 JA 1/16W
R7006	401 113 4917	MT-GLAZE 200 JA 1/16W
R7007	401 105 2419	MT-GLAZE 2K JA 1/16W
R7008	401 105 6615	MT-GLAZE 6.8K JA 1/16W
R7009	401 290 1518	MT-GLAZE 0.1 JE 1/2W
R7014	401 105 7919	MT-GLAZE 0.000 ZA 1/16W
R7016	401 105 0415	MT-GLAZE 100 JA 1/16W
R7017	401 105 0415	MT-GLAZE 100 JA 1/16W
R7018	401 105 0415	MT-GLAZE 100 JA 1/16W
R7019	401 105 0415	MT-GLAZE 100 JA 1/16W
R7021	401 105 0415	MT-GLAZE 100 JA 1/16W
R7022	401 105 0415	MT-GLAZE 100 JA 1/16W
R7023	401 105 0415	MT-GLAZE 100 JA 1/16W
R7024	401 105 7919	MT-GLAZE 0.000 ZA 1/16W
R7026	401 113 4917	MT-GLAZE 200 JA 1/16W
R7027	401 105 2419	MT-GLAZE 2K JA 1/16W
R7028	401 105 6615	MT-GLAZE 6.8K JA 1/16W
R7029	401 234 8115	MT-GLAZE 4.7 JA 1W
R7030	401 105 7919	MT-GLAZE 0.000 ZA 1/16W
R7031	401 234 8115	MT-GLAZE 4.7 JA 1W
R7032	401 105 0415	MT-GLAZE 100 JA 1/16W
R7033	401 035 4118	MT-GLAZE 0.000 ZA 1/8W
R7034	401 035 4118	MT-GLAZE 0.000 ZA 1/8W
R7035	401 105 7919	MT-GLAZE 0.000 ZA 1/16W
R7036	401 105 2518	MT-GLAZE 20K JA 1/16W
R7038	401 105 7919	MT-GLAZE 0.000 ZA 1/16W
R7039	401 105 7919	MT-GLAZE 0.000 ZA 1/16W
DIODE		
D7001	407 209 1211	ZD UDZS-TE-176.2B
D7002	407 209 1211	ZD UDZS-TE-176.2B
D7003	407 209 1211	ZD UDZS-TE-176.2B
D7004	407 209 1211	ZD UDZS-TE-176.2B
D7006	407 209 1211	ZD UDZS-TE-176.2B
D7007	407 209 1211	ZD UDZS-TE-176.2B
MISCELLANEOUS		
K70C	645 051 9611	PLUG,D-SUB 25P

POWER BOARD

610 318 8591 ASSY,PWB,POWER ME5A

Key No.	Part No.	Description
TRANSISTOR		
Q601	405 161 9600	TR SPP20N60S5
Q602	405 161 9600	TR SPP20N60S5
Q621	405 014 4519	TR 2SC2412K T146 R
	405 014 4618	TR 2SC2412K T146 S
	405 015 8724	TR 2SC2812-L6-TB
	405 015 8922	TR 2SC2812-L7-TB
	405 163 1612	TR 2SC2812N-L6-TB0
	405 163 1711	TR 2SC2812N-L7-TB0
Q622	405 134 5925	TR 2SA1037AK-T146-R
	405 147 2215	TR 2SA1037AK-S-T146
	405 002 0318	TR 2SA1037K T146 R
	405 002 0417	TR 2SA1037K T146 S
	405 002 6726	TR 2SA1179-M6-TB
	405 002 6924	TR 2SA1179-M7-TB
	405 163 1513	TR 2SA1179N-M6-TB
	405 163 2718	TR 2SA1179N-M7-TB
Q623	405 014 4519	TR 2SC2412K T146 R
	405 014 4618	TR 2SC2412K T146 S
	405 015 8724	TR 2SC2812-L6-TB
	405 015 8922	TR 2SC2812-L7-TB
	405 163 1612	TR 2SC2812N-L6-TB0
	405 163 1711	TR 2SC2812N-L7-TB0
Q624	405 134 5925	TR 2SA1037AK-T146-R
	405 147 2215	TR 2SA1037AK-S-T146
	405 002 0318	TR 2SA1037K T146 R
	405 002 0417	TR 2SA1037K T146 S
	405 002 6726	TR 2SA1179-M6-TB
	405 002 6924	TR 2SA1179-M7-TB
	405 163 1513	TR 2SA1179N-M6-TB
	405 163 2718	TR 2SA1179N-M7-TB
Q681	405 014 4519	TR 2SC2412K T146 R
	405 014 4618	TR 2SC2412K T146 S
	405 015 8724	TR 2SC2812-L6-TB
	405 015 8922	TR 2SC2812-L7-TB
	405 163 1612	TR 2SC2812N-L6-TB0
	405 163 1711	TR 2SC2812N-L7-TB0
INTEGRATED CIRCUIT		
IC601	409 523 1410	IC FA5502M
IC651	409 558 4209	IC STR-Z2156A
IC681	409 344 6529	IC UPC1093T-E1
CAPACITOR		
C607	403 275 6013	MT-POLYEST 1.5U J 400V
C608	403 222 1323	CERAMIC 1000P K 1K
C609	403 222 1323	CERAMIC 1000P K 1K
C611	403 275 6013	MT-POLYEST 1.5U J 400V
C612	403 356 1814	ELECT 220U M 35V
C613	403 341 6124	ELECT 100U M 25V
C614	403 341 6124	ELECT 100U M 25V
C616	404 093 9603	ELECT 390U M 450V
C618	403 323 8716	MT-POLYEST 0.047U K 450V
C619	403 298 9619	CERAMIC 0.1U K 16V
C621	403 205 2818	CERAMIC 0.047U K 25V
C622	403 157 6414	CERAMIC 330P K 50V
C623	403 215 2211	CERAMIC 0.01U K 50V
C624	403 164 0214	CERAMIC 0.1U Z 25V
C625	403 398 7119	ELECT 4.7U M 50V
C626	403 164 0214	CERAMIC 0.1U Z 25V
C627	403 164 0214	CERAMIC 0.1U Z 25V
C628	403 157 3314	CERAMIC 68P J 50V
C629	403 157 6612	CERAMIC 470P K 50V
C631	403 298 9619	CERAMIC 0.1U K 16V
C632	403 164 0214	CERAMIC 0.1U Z 25V
C633	403 164 0214	CERAMIC 0.1U Z 25V
C634	403 164 0214	CERAMIC 0.1U Z 25V
C636	403 323 8716	MT-POLYEST 0.047U K 450V
C651	403 398 6518	ELECT 2.2U M 50V
C652	403 237 7941	MT-COMPO 0.22U J 50V
C653	403 113 3815	CERAMIC 1000P K 50V
C654	403 247 3316	CERAMIC 330P K 2K
C656	403 164 0214	CERAMIC 0.1U Z 25V
C657	403 218 8814	CERAMIC 220P K 2K
C658	403 083 4317	POLYPRO 0.022U J 400V
C659	403 157 6810	CERAMIC 680P K 50V
C661	403 398 6112	ELECT 1U M 50V
C662	403 356 1814	ELECT 220U M 35V
C663	403 164 0214	CERAMIC 0.1U Z 25V
C664	403 281 5215	CERAMIC 0.22U Z 16V
C681	403 355 9524	ELECT 4700U M 25V
C682	403 164 0214	CERAMIC 0.1U Z 25V
C683	403 368 8719	ELECT 3300U M 10V
C684	403 164 0214	CERAMIC 0.1U Z 25V
C685	403 325 8625	ELECT 220U M 16V
C686	403 323 1311	CERAMIC 0.47U Z 10V
C688	403 164 0214	CERAMIC 0.1U Z 25V
C689	403 325 8526	ELECT 1000U M 16V
C692	403 323 8815	CERAMIC 2.2U Z 16V
RESISTOR		
R602	401 242 3911	MT-GLAZE 240K JA 1/2W
R603	401 242 3911	MT-GLAZE 240K JA 1/2W
R604	401 258 8214	MT-GLAZE 680 JA 1/3W
R606	402 080 8806	MT-GLAZE 680 KA 1W
R607	401 237 0017	MT-GLAZE 47K JA 1W
R608	401 237 0017	MT-GLAZE 47K JA 1W
R609	401 237 0017	MT-GLAZE 47K JA 1W
R610	401 237 0017	MT-GLAZE 47K JA 1W
R611	401 237 0017	MT-GLAZE 47K JA 1W
R612	401 237 0017	MT-GLAZE 47K JA 1W
R613	402 095 0604	RESISTER 0.15 JB 5W
R614	402 095 0604	RESISTER 0.15 JB 5W
R615	401 105 0415	MT-GLAZE 100 JA 1/16W
R616	401 105 0514	MT-GLAZE 1K JA 1/16W
R617	401 105 1610	MT-GLAZE 15K JA 1/16W
R618	401 105 0316	MT-GLAZE 10 JA 1/16W
R619	401 105 7919	MT-GLAZE 0.000 ZA 1/16W
R620	401 105 0415	MT-GLAZE 100 JA 1/16W
R621	401 105 2617	MT-GLAZE 22 JA 1/16W
R622	401 224 6015	MT-GLAZE 36K FA 1/16W
R623	401 105 4314	MT-GLAZE 330K JA 1/16W
R624	401 105 1917	MT-GLAZE 180 JA 1/16W
R625	401 158 4118	MT-GLAZE 4.7 JA 1/16W
R626	401 105 4017	MT-GLAZE 330 JA 1/16W
R627	401 158 4118	MT-GLAZE 4.7 JA 1/16W
R628	401 105 0415	MT-GLAZE 100 JA 1/16W
R630	401 105 4512	MT-GLAZE 390 JA 1/16W
R631	401 105 0613	MT-GLAZE 10K JA 1/16W
R632	401 113 6317	MT-GLAZE 4.3K JA 1/16W
R633	401 105 5519	MT-GLAZE 470K JA 1/16W
R634	401 105 3515	MT-GLAZE 270K JA 1/16W
R635	401 105 0415	MT-GLAZE 100 JA 1/16W
R636	401 105 0514	MT-GLAZE 1K JA 1/16W
R637	401 218 4416	MT-GLAZE 1.2K FA 1/16W
R638	401 259 9012	MT-GLAZE 150K FA 1/2W
R639	401 259 9012	MT-GLAZE 150K FA 1/2W
R641	401 259 9012	MT-GLAZE 150K FA 1/2W
R642	401 259 9012	MT-GLAZE 150K FA 1/2W
R643	401 105 2815	MT-GLAZE 2.2K JA 1/16W
R644	401 105 3317	MT-GLAZE 2.7K JA 1/16W
R646	401 105 1610	MT-GLAZE 15K JA 1/16W

Electrical Parts List

Key No.	Part No.	Description
R647	401 111 6319	MT-GLAZE 470 JA 1/2W
R648	401 111 6319	MT-GLAZE 470 JA 1/2W
R649	401 105 3010	MT-GLAZE 220K JA 1/16W
R650	401 105 5311	MT-GLAZE 4.7K JA 1/16W
R651	401 237 0017	MT-GLAZE 47K JA 1W
R652	401 237 0017	MT-GLAZE 47K JA 1W
R653	401 237 0017	MT-GLAZE 47K JA 1W
R654	401 237 0017	MT-GLAZE 47K JA 1W
R655	401 105 5311	MT-GLAZE 4.7K JA 1/16W
R656	401 237 0017	MT-GLAZE 47K JA 1W
R657	401 237 0017	MT-GLAZE 47K JA 1W
⚠R658	402 081 2902	FUSIBLE RES 22 JH 1/2W
R659	401 238 4519	MT-GLAZE 47 JA 1/3W
⚠R661	424 006 1302	FUSE 250V 2.5A
R671	401 105 0514	MT-GLAZE 1K JA 1/16W
R672	401 257 7416	MT-GLAZE 120 JA 1/3W
R673	401 105 5311	MT-GLAZE 4.7K JA 1/16W
R674	401 105 0613	MT-GLAZE 10K JA 1/16W
R679	401 230 8911	MT-GLAZE 390 FA 1/16W
R680	401 212 0216	MT-GLAZE 33K FA 1/16W
R681	401 105 0613	MT-GLAZE 10K JA 1/16W
R682	401 105 3218	MT-GLAZE 270 JA 1/16W
R683	401 105 0514	MT-GLAZE 1K JA 1/16W
R685	401 105 4611	MT-GLAZE 3.9K JA 1/16W
R686	401 105 0514	MT-GLAZE 1K JA 1/16W
R687	401 228 6615	MT-GLAZE 6.2K FA 1/16W
R689	401 105 0514	MT-GLAZE 1K JA 1/16W
R690	401 105 0316	MT-GLAZE 10 JA 1/16W
R691	401 105 3317	MT-GLAZE 2.7K JA 1/16W
R692	401 105 0514	MT-GLAZE 1K JA 1/16W
R693	401 105 0613	MT-GLAZE 10K JA 1/16W
R694	401 105 5311	MT-GLAZE 4.7K JA 1/16W
R695	401 105 0514	MT-GLAZE 1K JA 1/16W
R697	401 299 1618	MT-GLAZE 1 JE 1/2W
R698	401 299 1618	MT-GLAZE 1 JE 1/2W
R699	401 238 4212	MT-GLAZE 1.5K JA 1/3W
VARIABLE RESISTOR		
VR601	645 025 7414	VR,SEMI,1K S
VR681	645 025 7414	VR,SEMI,1K S
TRANSFORMER		
T601	645 051 9369	INDUCTOR,625U
⚠T651	645 028 0641	TRANS,POWER,PULSE
TSW601	645 026 4511	SWITCH,THERMAL
	645 043 3009	THERMOSTATS
COIL		
L603	645 052 6213	LINE FILTER
L651	645 020 1776	INDUCTOR,3.3U M
L681	645 048 5374	INDUCTOR,100U K
DIODE		
D601	407 190 4116	DIODE SFPL-52V
D602	407 190 4116	DIODE SFPL-52V
D603	407 149 6324	DIODE SFPB-54V
D604	407 225 4408	DIODE FMX-G26S
D605	407 223 0818	ZENER DIODE 02DZ22Y(TPH3)
D606	407 149 0817	DIODE 1SS355-TE-17
D607	407 149 0817	DIODE 1SS355-TE-17
D608	407 149 0817	DIODE 1SS355-TE-17
D609	407 149 0817	DIODE 1SS355-TE-17
D610	407 149 6324	DIODE SFPB-54V
D611	407 223 1112	ZENER DIODE 02DZ6.2Y(TPH3
D612	407 149 0817	DIODE 1SS355-TE-17
D614	407 149 0817	DIODE 1SS355-TE-17
D615	407 149 0817	DIODE 1SS355-TE-17
D651	407 190 4116	DIODE SFPL-52V
D652	407 075 5303	DIODE ERA38-06
D653	407 223 0511	ZENER DIODE 02DZ12Y(TPH3)
D681	407 202 9808	DIODE FMB-26L
D682	407 202 9808	DIODE FMB-26L
D683	407 190 4116	DIODE SFPL-52V
D684	407 190 4116	DIODE SFPL-52V
D686	407 223 1112	ZENER DIODE 02DZ6.2Y(TPH3
DB601	407 143 6003	DIODE RBV-1506
	408 045 4906	DIODE RBV-1506 LF-B
DS601	407 219 0805	THYRISTOR TF861S
DS602	407 219 0805	THYRISTOR TF861S
MISCELLANEOUS		
FB601	610 244 3974	CORE
FB602	610 244 3974	CORE
⚠PC601	407 223 7312	PC TLP421F(D4-GB-TP4)
	407 223 8319	PC TLP421F(D4-GR-TP4)
⚠PC602	407 223 7312	PC TLP421F(D4-GB-TP4)
	407 223 8319	PC TLP421F(D4-GR-TP4)
⚠PC603	407 223 7312	PC TLP421F(D4-GB-TP4)
	407 223 8319	PC TLP421F(D4-GR-TP4)
PTH601	408 037 5607	THERMISTOR NTH11D8R0LC

SUB POWER BOARD

610 318 8607 ASSY,PWB,SUB POWER ME5A

Key No.	Part No.	Description
TRANSISTOR		
Q6603	405 047 9017	TR 2SB1204-S-TL
	405 047 9116	TR 2SB1204-T-TL
Q6604	405 014 4519	TR 2SC2412K T146 R
	405 014 4618	TR 2SC2412K T146 S
	405 015 8724	TR 2SC2812-L6-TB
	405 015 8922	TR 2SC2812-L7-TB
	405 163 1612	TR 2SC2812N-L6-TB0
	405 163 1711	TR 2SC2812N-L7-TB0
Q6609	405 014 4519	TR 2SC2412K T146 R
	405 014 4618	TR 2SC2412K T146 S
	405 015 8724	TR 2SC2812-L6-TB
	405 015 8922	TR 2SC2812-L7-TB
	405 163 1612	TR 2SC2812N-L6-TB0
	405 163 1711	TR 2SC2812N-L7-TB0
Q6611	405 047 9017	TR 2SB1204-S-TL
	405 047 9116	TR 2SB1204-T-TL
Q6612	405 014 4519	TR 2SC2412K T146 R
	405 014 4618	TR 2SC2412K T146 S
	405 015 8724	TR 2SC2812-L6-TB
	405 015 8922	TR 2SC2812-L7-TB
	405 163 1612	TR 2SC2812N-L6-TB0
	405 163 1711	TR 2SC2812N-L7-TB0
Q6613	405 014 4519	TR 2SC2412K T146 R
	405 014 4618	TR 2SC2412K T146 S
	405 015 8724	TR 2SC2812-L6-TB
	405 015 8922	TR 2SC2812-L7-TB
	405 163 1612	TR 2SC2812N-L6-TB0
	405 163 1711	TR 2SC2812N-L7-TB0
Q6614	405 014 4519	TR 2SC2412K T146 R
	405 014 4618	TR 2SC2412K T146 S
	405 015 8724	TR 2SC2812-L6-TB
	405 015 8922	TR 2SC2812-L7-TB
	405 163 1612	TR 2SC2812N-L6-TB0
	405 163 1711	TR 2SC2812N-L7-TB0
Q6616	405 014 4519	TR 2SC2412K T146 R
	405 014 4618	TR 2SC2412K T146 S
	405 015 8724	TR 2SC2812-L6-TB
	405 015 8922	TR 2SC2812-L7-TB
	405 163 1612	TR 2SC2812N-L6-TB0
	405 163 1711	TR 2SC2812N-L7-TB0
Q6617	405 014 4519	TR 2SC2412K T146 R
	405 014 4618	TR 2SC2412K T146 S

Electrical Parts List

Key No.	Part No.	Description
	405 015 8724	TR 2SC2812-L6-TB
	405 015 8922	TR 2SC2812-L7-TB
	405 163 1612	TR 2SC2812N-L6-TB0
	405 163 1711	TR 2SC2812N-L7-TB0
Q6618	405 164 2717	TR SI9803DY
Q6622	405 156 0229	TR 2SK2376
Q6623	405 014 4519	TR 2SC2412K T146 R
	405 014 4618	TR 2SC2412K T146 S
	405 015 8724	TR 2SC2812-L6-TB
	405 015 8922	TR 2SC2812-L7-TB
	405 163 1612	TR 2SC2812N-L6-TB0
	405 163 1711	TR 2SC2812N-L7-TB0
Q6624	405 014 4519	TR 2SC2412K T146 R
	405 014 4618	TR 2SC2412K T146 S
	405 015 8724	TR 2SC2812-L6-TB
	405 015 8922	TR 2SC2812-L7-TB
	405 163 1612	TR 2SC2812N-L6-TB0
	405 163 1711	TR 2SC2812N-L7-TB0
Q6626	405 047 9017	TR 2SB1204-S-TL
	405 047 9116	TR 2SB1204-T-TL
Q6627	405 047 9017	TR 2SB1204-S-TL
	405 047 9116	TR 2SB1204-T-TL
Q6628	405 014 4519	TR 2SC2412K T146 R
	405 014 4618	TR 2SC2412K T146 S
	405 015 8724	TR 2SC2812-L6-TB
	405 015 8922	TR 2SC2812-L7-TB
	405 163 1612	TR 2SC2812N-L6-TB0
	405 163 1711	TR 2SC2812N-L7-TB0
Q6629	405 156 0229	TR 2SK2376
Q6651	405 139 7716	TR IMZ1A-T108
Q6652	405 139 7716	TR IMZ1A-T108
Q6661	405 014 4519	TR 2SC2412K T146 R
	405 014 4618	TR 2SC2412K T146 S
	405 015 8724	TR 2SC2812-L6-TB
	405 015 8922	TR 2SC2812-L7-TB
	405 163 1612	TR 2SC2812N-L6-TB0
	405 163 1711	TR 2SC2812N-L7-TB0
INTEGRATED CIRCUIT		
IC6601	409 461 7829	IC PQ20WZ11
IC6602	409 531 6226	IC FA7701V-TE1
IC6603	409 531 6226	IC FA7701V-TE1
IC6607	409 461 7829	IC PQ20WZ11
IC6608	409 501 9216	IC LTC1622CS8
IC6609	409 461 7829	IC PQ20WZ11
IC6611	409 344 6529	IC UPC1093T-E1
IC6612	409 344 6529	IC UPC1093T-E1
IC6616	409 531 6226	IC FA7701V-TE1
IC6621	409 497 6312	IC BA09FP-E2
IC6622	409 416 6515	IC BA05FP-E2
CAPACITOR		
C6601	403 164 0214	CERAMIC 0.1U Z 25V
C6602	403 164 0214	CERAMIC 0.1U Z 25V
C6603	403 391 5112	ELECT 100U M 16V
C6605	403 348 3710	ELECT 470U M 25V
C6606	403 368 8719	ELECT 3300U M 10V
C6608	403 348 3710	ELECT 470U M 25V
C6609	403 281 5215	CERAMIC 0.22U Z 16V
C6611	403 155 2319	CERAMIC 4700P K 50V
C6613	403 325 8526	ELECT 1000U M 16V
C6614	403 164 0214	CERAMIC 0.1U Z 25V
C6617	403 164 0214	CERAMIC 0.1U Z 25V
C6618	403 281 5215	CERAMIC 0.22U Z 16V
C6619	403 325 8526	ELECT 1000U M 16V
C6620	403 164 0214	CERAMIC 0.1U Z 25V
C6621	403 155 2319	CERAMIC 4700P K 50V
C6622	403 391 5112	ELECT 100U M 16V
C6624	403 348 3710	ELECT 470U M 25V
C6625	403 164 0214	CERAMIC 0.1U Z 25V
C6626	403 164 0214	CERAMIC 0.1U Z 25V
C6627	403 325 8526	ELECT 1000U M 16V
C6628	403 368 8719	ELECT 3300U M 10V
C6629	403 325 8625	ELECT 220U M 16V
C6632	403 325 8526	ELECT 1000U M 16V
C6633	403 334 6926	ELECT 1000U M 6.3V
C6634	403 334 6926	ELECT 1000U M 6.3V
C6635	403 164 0214	CERAMIC 0.1U Z 25V
C6636	403 368 8719	ELECT 3300U M 10V
C6637	403 368 8719	ELECT 3300U M 10V
C6639	403 157 6612	CERAMIC 470P K 50V
C6640	403 164 0214	CERAMIC 0.1U Z 25V
C6641	403 157 3611	CERAMIC 100P J 50V
C6642	403 157 3611	CERAMIC 100P J 50V
C6643	403 368 8719	ELECT 3300U M 10V
C6644	403 164 0214	CERAMIC 0.1U Z 25V
C6645	403 164 0214	CERAMIC 0.1U Z 25V
C6646	403 164 0214	CERAMIC 0.1U Z 25V
C6647	403 354 8419	ELECT 2200U M 6.3V
C6653	403 347 5517	POS-SOLID 470U M 4V
C6654	403 164 0214	CERAMIC 0.1U Z 25V
C6655	403 391 5716	ELECT 4.7U M 25V
C6659	403 164 0214	CERAMIC 0.1U Z 25V
C6660	403 164 0214	CERAMIC 0.1U Z 25V
C6661	403 164 0214	CERAMIC 0.1U Z 25V
C6662	403 325 8625	ELECT 220U M 16V
C6667	403 331 0323	ELECT 470U M 16V
C6668	403 331 0323	ELECT 470U M 16V
C6669	403 348 3710	ELECT 470U M 25V
C6671	403 352 8213	CERAMIC 0.47U Z 16V
C6672	403 155 2319	CERAMIC 4700P K 50V
C6673	403 164 0214	CERAMIC 0.1U Z 25V
C6674	403 325 8526	ELECT 1000U M 16V
C6678	403 354 8419	ELECT 2200U M 6.3V
C6701	403 164 0214	CERAMIC 0.1U Z 25V
C6702	403 094 2626	OS-SOLID 47U M 16V
C6703	403 164 0214	CERAMIC 0.1U Z 25V
C6704	403 281 5215	CERAMIC 0.22U Z 16V
C6705	403 094 2626	OS-SOLID 47U M 16V
C6706	403 164 0214	CERAMIC 0.1U Z 25V
C6707	403 281 5215	CERAMIC 0.22U Z 16V
C6708	403 164 0214	CERAMIC 0.1U Z 25V
C6709	403 094 2626	OS-SOLID 47U M 16V
C6711	403 164 0214	CERAMIC 0.1U Z 25V
C6712	403 348 3710	ELECT 470U M 25V
C6713	403 348 3710	ELECT 470U M 25V
C6778	403 205 7813	TA-SOLID 2.2U M 16V
RESISTOR		
R6601	401 105 7919	MT-GLAZE 0.000 ZA 1/16W
R6602	401 219 1117	MT-GLAZE 1.8K FA 1/16W
R6604	401 203 9914	MT-GLAZE 4.7K FA 1/16W
R6606	401 105 0415	MT-GLAZE 100 JA 1/16W
R6610	401 238 4212	MT-GLAZE 1.5K JA 1/3W
R6611	401 299 1618	MT-GLAZE 1 JE 1/2W
R6620	401 230 4715	MT-GLAZE 680 JA 1W
R6621	401 105 8015	MT-GLAZE 1M JA 1/16W
R6623	401 105 4017	MT-GLAZE 330 JA 1/16W
R6624	401 290 1518	MT-GLAZE 0.1 JE 1/2W
R6625	401 113 8410	MT-GLAZE 75K JA 1/16W
R6626	401 105 0613	MT-GLAZE 10K JA 1/16W
R6627	401 105 2914	MT-GLAZE 22K JA 1/16W
R6628	401 202 4019	MT-GLAZE 10K FA 1/16W
R6629	401 219 1117	MT-GLAZE 1.8K FA 1/16W
R6630	401 105 0712	MT-GLAZE 100K JA 1/16W
R6631	401 105 3218	MT-GLAZE 270 JA 1/16W
R6632	401 105 5311	MT-GLAZE 4.7K JA 1/16W

Electrical Parts List

Key No.	Part No.	Description
R6633	401 105 0613	MT-GLAZE 10K JA 1/16W
R6634	401 105 3416	MT-GLAZE 27K JA 1/16W
R6635	401 105 0613	MT-GLAZE 10K JA 1/16W
R6636	401 105 7919	MT-GLAZE 0.000 ZA 1/16W
R6637	401 105 1412	MT-GLAZE 150 JA 1/16W
R6638	401 113 5914	MT-GLAZE 1.3K JA 1/16W
R6640	401 105 5311	MT-GLAZE 4.7K JA 1/16W
R6641	401 105 0613	MT-GLAZE 10K JA 1/16W
R6642	401 212 0513	MT-GLAZE 6.8K FA 1/16W
R6643	401 105 0613	MT-GLAZE 10K JA 1/16W
R6644	401 105 5311	MT-GLAZE 4.7K JA 1/16W
R6645	401 290 1518	MT-GLAZE 0.1 JE 1/2W
R6646	401 113 8410	MT-GLAZE 75K JA 1/16W
R6647	401 105 4017	MT-GLAZE 330 JA 1/16W
R6648	401 230 4715	MT-GLAZE 680 JA 1W
R6649	401 105 3416	MT-GLAZE 27K JA 1/16W
R6650	401 105 0613	MT-GLAZE 10K JA 1/16W
R6651	401 105 7919	MT-GLAZE 0.000 ZA 1/16W
R6652	401 105 0712	MT-GLAZE 100K JA 1/16W
R6654	401 177 2416	MT-GLAZE 10M JA 1/16W
R6655	401 290 1518	MT-GLAZE 0.1 JE 1/2W
R6656	401 240 6429	MT-GLAZE 2.2 JE 1/2W
R6657	401 105 1412	MT-GLAZE 150 JA 1/16W
R6658	401 113 5914	MT-GLAZE 1.3K JA 1/16W
R6659	401 105 5311	MT-GLAZE 4.7K JA 1/16W
R6660	401 105 0613	MT-GLAZE 10K JA 1/16W
R6661	401 105 0613	MT-GLAZE 10K JA 1/16W
R6662	401 105 0514	MT-GLAZE 1K JA 1/16W
R6663	401 238 4212	MT-GLAZE 1.5K JA 1/3W
R6664	401 105 0613	MT-GLAZE 10K JA 1/16W
R6665	401 299 1618	MT-GLAZE 1 JE 1/2W
R6666	401 105 5311	MT-GLAZE 4.7K JA 1/16W
R6667	401 105 0613	MT-GLAZE 10K JA 1/16W
R6668	401 105 0514	MT-GLAZE 1K JA 1/16W
R6669	401 105 0613	MT-GLAZE 10K JA 1/16W
R6670	401 105 5311	MT-GLAZE 4.7K JA 1/16W
R6671	401 203 9914	MT-GLAZE 4.7K FA 1/16W
R6672	401 105 5212	MT-GLAZE 470 JA 1/16W
R6673	401 177 2416	MT-GLAZE 10M JA 1/16W
R6675	401 247 0212	MT-GLAZE 3.9K FA 1/16W
R6676	401 105 0712	MT-GLAZE 100K JA 1/16W
R6677	401 230 2513	MT-GLAZE 1K FA 1/16W
R6678	401 105 7315	MT-GLAZE 820 JA 1/16W
R6679	401 247 0212	MT-GLAZE 3.9K FA 1/16W
R6681	401 212 0018	MT-GLAZE 15K FA 1/16W
R6682	401 230 4715	MT-GLAZE 680 JA 1W
R6683	401 105 4017	MT-GLAZE 330 JA 1/16W
R6684	401 290 1518	MT-GLAZE 0.1 JE 1/2W
R6686	401 113 8410	MT-GLAZE 75K JA 1/16W
R6687	401 105 5311	MT-GLAZE 4.7K JA 1/16W
R6689	401 105 0613	MT-GLAZE 10K JA 1/16W
R6690	401 105 3317	MT-GLAZE 2.7K JA 1/16W
R6691	401 105 0613	MT-GLAZE 10K JA 1/16W
R6692	401 235 4413	MT-GLAZE 560 FA 1/16W
R6694	401 225 5611	MT-GLAZE 2.2 JA 1W
R6695	401 290 1518	MT-GLAZE 0.1 JE 1/2W
R6708	401 219 1117	MT-GLAZE 1.8K FA 1/16W
R6709	401 219 1117	MT-GLAZE 1.8K FA 1/16W
R6710	401 105 1412	MT-GLAZE 150 JA 1/16W
R6717	401 105 0316	MT-GLAZE 10 JA 1/16W
R6718	401 105 0316	MT-GLAZE 10 JA 1/16W
R6719	401 105 0514	MT-GLAZE 1K JA 1/16W
R6720	401 105 7919	MT-GLAZE 0.000 ZA 1/16W
R6722	401 105 0613	MT-GLAZE 10K JA 1/16W
R6725	401 290 1518	MT-GLAZE 0.1 JE 1/2W
R6730	401 290 1518	MT-GLAZE 0.1 JE 1/2W
R6731	401 105 0613	MT-GLAZE 10K JA 1/16W
R6732	401 105 0613	MT-GLAZE 10K JA 1/16W
R6736	401 203 9914	MT-GLAZE 4.7K FA 1/16W
R6737	401 105 5212	MT-GLAZE 470 JA 1/16W
R6738	401 247 0212	MT-GLAZE 3.9K FA 1/16W
R6739	401 105 5311	MT-GLAZE 4.7K JA 1/16W
R6742	401 105 5311	MT-GLAZE 4.7K JA 1/16W
R6751	401 105 2914	MT-GLAZE 22K JA 1/16W
R6752	401 113 5112	MT-GLAZE 300 JA 1/16W
R6753	401 105 0613	MT-GLAZE 10K JA 1/16W
R6754	401 105 0514	MT-GLAZE 1K JA 1/16W
R6756	401 105 0613	MT-GLAZE 10K JA 1/16W
R6757	401 113 5716	MT-GLAZE 910 JA 1/16W
R6761	401 105 2914	MT-GLAZE 22K JA 1/16W
R6762	401 113 5112	MT-GLAZE 300 JA 1/16W
R6763	401 105 0613	MT-GLAZE 10K JA 1/16W
R6764	401 105 0514	MT-GLAZE 1K JA 1/16W
R6766	401 105 0613	MT-GLAZE 10K JA 1/16W
R6767	401 113 5716	MT-GLAZE 910 JA 1/16W
R6777	401 294 5512	MT-GLAZE 0.03 JX 1/4W
R6779	401 294 5512	MT-GLAZE 0.03 JX 1/4W
R6781	401 105 0613	MT-GLAZE 10K JA 1/16W
R6782	401 105 5311	MT-GLAZE 4.7K JA 1/16W
R6783	401 105 0613	MT-GLAZE 10K JA 1/16W
R6784	401 105 5311	MT-GLAZE 4.7K JA 1/16W
R6785	401 219 1117	MT-GLAZE 1.8K FA 1/16W
R6786	401 105 0613	MT-GLAZE 10K JA 1/16W
R6787	401 230 2513	MT-GLAZE 1K FA 1/16W
R6788	401 203 9815	MT-GLAZE 2.7K FA 1/16W
R6795	401 035 4118	MT-GLAZE 0.000 ZA 1/8W
COIL		
L6604	645 048 5374	INDUCTOR,100U K
L6606	645 048 5671	INDUCTOR,47U K
L6607	645 037 4791	INDUCTOR,100U M
L6608	645 048 5671	INDUCTOR,47U K
L6609	645 046 1996	INDUCTOR,5.6U N
L6611	645 007 8125	INDUCTOR,47U K
L6612	645 048 5671	INDUCTOR,47U K
L6613	645 007 7975	INDUCTOR,100U K
L6614	645 048 5671	INDUCTOR,47U K
L6616	645 048 5374	INDUCTOR,100U K
L6617	645 048 5671	INDUCTOR,47U K
L6619	645 007 7975	INDUCTOR,100U K
L6701	645 048 5671	INDUCTOR,47U K
DIODE		
D6606	407 223 5011	DIODE D1FM3
D6607	407 222 1311	DIODE CMS04
D6608	407 149 0817	DIODE 1SS355-TE-17
D6609	407 223 5011	DIODE D1FM3
D6610	407 149 0817	DIODE 1SS355-TE-17
D6611	407 223 5011	DIODE D1FM3
D6614	407 149 0817	DIODE 1SS355-TE-17
D6616	407 149 0817	DIODE 1SS355-TE-17
D6617	407 149 0817	DIODE 1SS355-TE-17
D6618	407 149 0817	DIODE 1SS355-TE-17
D6661	407 223 0511	ZENER DIODE 02DZ12Y(TPH3)
D6662	407 149 0817	DIODE 1SS355-TE-17
D6663	407 223 0917	ZENER DIODE 02DZ4.7Y(TPH3
D6664	407 149 0817	DIODE 1SS355-TE-17

DRIVE BOARD

610 318 8614 ASSY,PWB,DRIVE ME5A

TRANSISTOR		
Q1681	405 045 8725	TR 2SK536-TB
Q1682	405 045 8725	TR 2SK536-TB

Electrical Parts List

Key No.	Part No.	Description
INTEGRATED CIRCUIT		
IC1601	409 085 1900	IC LB1645N
IC1602	409 114 4803	IC LB1641
IC1611	409 114 4803	IC LB1641
IC1621	409 124 5916	IC L78M12T-TL
IC1631	410 405 9308	IC TDA7056AT/N2
IC1632	410 405 9308	IC TDA7056AT/N2
IC1641	409 404 6322	IC M62320FP
IC1651	409 390 6221	IC EL2244CS
IC1652	409 367 1624	IC BH3540AFS-E2
CAPACITOR		
C1601	403 325 8526	ELECT 1000U M 16V
C1602	403 149 9218	CERAMIC 0.01U Z 50V
C1603	403 149 9218	CERAMIC 0.01U Z 50V
C1604	403 325 8625	ELECT 220U M 16V
C1606	403 149 9218	CERAMIC 0.01U Z 50V
C1607	403 149 9218	CERAMIC 0.01U Z 50V
C1608	403 325 8625	ELECT 220U M 16V
C1612	403 149 9218	CERAMIC 0.01U Z 50V
C1613	403 149 9218	CERAMIC 0.01U Z 50V
C1614	403 325 8625	ELECT 220U M 16V
C1621	403 331 0323	ELECT 470U M 16V
C1622	403 331 0323	ELECT 470U M 16V
C1623	403 164 0214	CERAMIC 0.1U Z 25V
C1624	403 164 0214	CERAMIC 0.1U Z 25V
C1626	403 331 0323	ELECT 470U M 16V
C1631	403 325 8625	ELECT 220U M 16V
C1632	403 323 8815	CERAMIC 2.2U Z 16V
C1633	403 164 0214	CERAMIC 0.1U Z 25V
C1634	403 323 8815	CERAMIC 2.2U Z 16V
C1636	403 325 8625	ELECT 220U M 16V
C1637	403 164 0214	CERAMIC 0.1U Z 25V
C1641	403 164 0214	CERAMIC 0.1U Z 25V
C1642	403 394 1319	ELECT 100U M 6.3V
C1643	403 164 0214	CERAMIC 0.1U Z 25V
C1661	403 323 8815	CERAMIC 2.2U Z 16V
C1671	403 323 8815	CERAMIC 2.2U Z 16V
C1672	403 323 8815	CERAMIC 2.2U Z 16V
C1673	403 397 6311	ELECT 22U M 16V
C1674	403 391 5112	ELECT 100U M 16V
C1675	403 391 5112	ELECT 100U M 16V
C1676	403 397 6311	ELECT 22U M 16V
C1677	401 037 5014	MT-GLAZE 0.000 ZA 1/10W
C1678	401 037 5014	MT-GLAZE 0.000 ZA 1/10W
C1679	403 164 0214	CERAMIC 0.1U Z 25V
RESISTOR		
R1601	401 105 4116	MT-GLAZE 3.3K JA 1/16W
R1602	401 105 4116	MT-GLAZE 3.3K JA 1/16W
R1603	401 105 0514	MT-GLAZE 1K JA 1/16W
R1604	401 105 4116	MT-GLAZE 3.3K JA 1/16W
R1606	401 105 4116	MT-GLAZE 3.3K JA 1/16W
R1607	401 105 0514	MT-GLAZE 1K JA 1/16W
R1612	401 105 4116	MT-GLAZE 3.3K JA 1/16W
R1613	401 105 4116	MT-GLAZE 3.3K JA 1/16W
R1614	401 105 0514	MT-GLAZE 1K JA 1/16W
R1621	401 184 2010	MT-GLAZE 2.2 JA 1/2W
R1622	401 184 2010	MT-GLAZE 2.2 JA 1/2W
R1623	401 184 2010	MT-GLAZE 2.2 JA 1/2W
R1624	401 190 1410	MT-GLAZE 0.000 ZA 1/2W
R1630	401 276 4717	MT-GLAZE 0.000 ZA 1/3W
R1631	401 276 4717	MT-GLAZE 0.000 ZA 1/3W
R1632	401 105 7919	MT-GLAZE 0.000 ZA 1/16W
R1633	401 105 5311	MT-GLAZE 4.7K JA 1/16W
R1635	401 105 5311	MT-GLAZE 4.7K JA 1/16W
R1636	401 105 7919	MT-GLAZE 0.000 ZA 1/16W
R1638	401 105 7919	MT-GLAZE 0.000 ZA 1/16W
R1639	401 105 7919	MT-GLAZE 0.000 ZA 1/16W
R1641	401 105 0415	MT-GLAZE 100 JA 1/16W
R1642	401 105 0415	MT-GLAZE 100 JA 1/16W
R1643	401 105 6110	MT-GLAZE 560K JA 1/16W
R1644	401 105 6110	MT-GLAZE 560K JA 1/16W
R1651	401 105 2419	MT-GLAZE 2K JA 1/16W
R1652	401 105 2419	MT-GLAZE 2K JA 1/16W
R1653	401 105 2419	MT-GLAZE 2K JA 1/16W
R1656	401 105 2419	MT-GLAZE 2K JA 1/16W
R1657	401 105 7919	MT-GLAZE 0.000 ZA 1/16W
R1658	401 105 7919	MT-GLAZE 0.000 ZA 1/16W
R1661	401 189 8314	MT-GLAZE 180 JA 1/3W
R1671	401 105 1511	MT-GLAZE 1.5K JA 1/16W
R1674	401 105 6516	MT-GLAZE 680 JA 1/16W
R1680	401 105 4710	MT-GLAZE 39K JA 1/16W
R1681	401 105 7919	MT-GLAZE 0.000 ZA 1/16W
R1683	401 113 6416	MT-GLAZE 5.1K JA 1/16W
R1684	401 113 6317	MT-GLAZE 4.3K JA 1/16W
R1685	401 105 4710	MT-GLAZE 39K JA 1/16W
R1686	401 105 7919	MT-GLAZE 0.000 ZA 1/16W
R1688	401 113 6416	MT-GLAZE 5.1K JA 1/16W
R1689	401 113 6317	MT-GLAZE 4.3K JA 1/16W
DIODE		
D1601	407 223 0511	ZENER DIODE 02DZ12Y(TPH3)
D1602	407 208 9713	ZD UDZS-TE-175.6B
D1604	407 149 0817	DIODE 1SS355-TE-17
D1611	407 223 1013	ZENER DIODE 02DZ5.1Y(TPH3
D1653	407 149 0817	DIODE 1SS355-TE-17
D1675	407 223 1013	ZENER DIODE 02DZ5.1Y(TPH3

FILTER BOARD

610 318 8621 ASSY,PWB,FILTER ME5A

CAPACITOR		
⚠C601	404 081 4702	MT-POLYEST 0.22U M 275V
⚠C602	404 081 4702	MT-POLYEST 0.22U M 275V
⚠C603	404 073 5106	CERAMIC 470P K 250V
⚠C604	404 073 5106	CERAMIC 470P K 250V
RESISTOR		
⚠R600	401 238 1013	MT-GLAZE 120K JA 1/2W
⚠R601	401 238 1013	MT-GLAZE 120K JA 1/2W
COIL		
⚠L601	645 061 3999	LINE FILTER
MISCELLANEOUS		
⚠F601	423 025 1201	FUSE 250V 8A
⚠VA601	408 018 9808	VARISTOR ENC471D-14AS

CONTROL BOARD

610 318 8645 ASSY,PWB,CONTROL ME5A

CAPACITOR		
C6871	403 164 0214	CERAMIC 0.1U Z 25V
C6881	403 164 0214	CERAMIC 0.1U Z 25V
C6891	403 164 0214	CERAMIC 0.1U Z 25V
C6892	403 164 0214	CERAMIC 0.1U Z 25V
RESISTOR		
R6871	401 105 2914	MT-GLAZE 22K JA 1/16W
R6872	401 105 1610	MT-GLAZE 15K JA 1/16W
R6873	401 105 6011	MT-GLAZE 5.6K JA 1/16W
R6874	401 105 5311	MT-GLAZE 4.7K JA 1/16W
R6875	401 105 3317	MT-GLAZE 2.7K JA 1/16W
R6876	401 105 4116	MT-GLAZE 3.3K JA 1/16W
R6878	401 105 5212	MT-GLAZE 470 JA 1/16W
R6887	401 105 1511	MT-GLAZE 1.5K JA 1/16W
R6888	401 105 5212	MT-GLAZE 470 JA 1/16W

Key No.	Part No.	Description
R6891	401 105 2914	MT-GLAZE 22K JA 1/16W
R6892	401 105 3812	MT-GLAZE 30K JA 1/16W
R6893	401 105 7919	MT-GLAZE 0.000 ZA 1/16W
R6894	401 105 7919	MT-GLAZE 0.000 ZA 1/16W
R6895	401 105 7919	MT-GLAZE 0.000 ZA 1/16W
R6896	401 105 7919	MT-GLAZE 0.000 ZA 1/16W
R6897	401 105 1511	MT-GLAZE 1.5K JA 1/16W
R6898	401 105 5212	MT-GLAZE 470 JA 1/16W
DIODE		
D6871	407 223 0511	ZENER DIODE 02DZ12Y(TPH3)
D6872	407 223 0511	ZENER DIODE 02DZ12Y(TPH3)
D6881	407 223 0511	ZENER DIODE 02DZ12Y(TPH3)
D6891	407 223 0511	ZENER DIODE 02DZ12Y(TPH3)
D6892	407 203 7813	LED SML-210LT T86 M
D6893	407 203 7912	LED SML-210MT T86 M
D6894	407 203 7813	LED SML-210LT T86 M
D6895	407 203 7714	LED SML-210DT T86 L
MISCELLANEOUS		
SW6871	645 026 2791	SWITCH,PUSH 1P-1TX1
SW6872	645 026 2791	SWITCH,PUSH 1P-1TX1
SW6873	645 026 2791	SWITCH,PUSH 1P-1TX1
SW6874	645 026 2791	SWITCH,PUSH 1P-1TX1
SW6875	645 026 2791	SWITCH,PUSH 1P-1TX1
SW6876	645 026 2791	SWITCH,PUSH 1P-1TX1
SW6878	645 026 2791	SWITCH,PUSH 1P-1TX1
SW6887	645 026 2791	SWITCH,PUSH 1P-1TX1
SW6888	645 026 2791	SWITCH,PUSH 1P-1TX1
SW6891	645 026 2791	SWITCH,PUSH 1P-1TX1
SW6892	645 026 2791	SWITCH,PUSH 1P-1TX1
SW6897	645 026 2791	SWITCH,PUSH 1P-1TX1
SW6898	645 026 2791	SWITCH,PUSH 1P-1TX1

RC FRONT BOARD

610 318 8652 ASSY,PWB,RC FRONT ME5A

CAPACITOR		
C2801	403 283 6319	CERAMIC 1U Z 10V
C2802	403 157 6216	CERAMIC 220P K 50V
C2803	403 392 1212	ELECT 47U M 6.3V
RESISTOR		
R2801	401 105 0415	MT-GLAZE 100 JA 1/16W
R2803	401 105 7919	MT-GLAZE 0.000 ZA 1/16W
DIODE		
D2803	407 225 0212	DIODE RB751S-40
MISCELLANEOUS		
AU2801	645 034 5029	UNIT,REMOCON RECEIVER

SENSOR 1 BOARD

610 318 8676 ASSY,PWB,SENSOR 1 ME5A

INTEGRATED CIRCUIT		
IC1691	409 481 8612	IC LM76CHMX-5
CAPACITOR		
C1691	403 281 5215	CERAMIC 0.22U Z 16V
C1692	403 155 1619	CERAMIC 33P J 50V
C1693	403 155 1619	CERAMIC 33P J 50V
RESISTOR		
R1691	401 105 0415	MT-GLAZE 100 JA 1/16W
R1692	401 105 0316	MT-GLAZE 10 JA 1/16W
R1693	401 105 0316	MT-GLAZE 10 JA 1/16W

ACCESSORIES

PRINTED MATTER / OWNER'S MANUAL

(English)	610 315 6910	OWNERS MANUAL-MH5A
(Germany)	610 315 6927	OWNERS MANUAL-MH5A-D
(French)	610 315 6934	OWNERS MANUAL-MH5A-F
(Italian)	610 315 6941	OWNERS MANUAL-MH5A-I
(Spanish)	610 315 6958	OWNERS MANUAL-MH5A-E
	610 306 7049	LENS INST MANUAL-MR3A

REMOTE CONTROL

	645 060 2238	ASSY,REMOCON CXPC
	610 302 4196	RC-BATTERY LID-CXLZ

⚠ AC CORD

(US)	645 064 6362	CORD,POWER-3.0MK,US
(EU)	645 054 1155	CORD,POWER-3.0MK
(UK)	645 054 1148	CORD,POWER-3.0MK

CABLE AND ADAPTER

	645 015 3976	CABLE,REMOTE
	645 039 7219	CABLE,MOUSE SERIAL
	645 054 3135	CABLE,MOUSE SERIAL
	645 061 5115	CABLE,USB
	645 063 6943	CABLE,USB
	645 057 2999	CABLE,INTERFACE VGA
	645 073 4854	CABLE,INTERFACE VGA

MISCELLANEOUS

	610 294 3351	COVER,DUST-MA8A

Service parts for PLC-XP51L(without lens model) only as follows :
(Refer to page.75)

70	610 306 6707	ASSY,MOUNTING LENS-MR3A (Including Key No.24,45)
24	610 306 6691	ASSY,MOUNTING LENS A-MR3A (Including Key No.24-a)
24-a	610 306 5922	ASSY,PWB,BASE NET MR3A
45	412 070 3803	SPECIAL SCREW
73	610 301 6658	ASSY,SPACER BF-MY8A

■ Mechanical Parts List

Note: Parts order must contain Chassis No., Part No., and Descriptions.

● CABINET PARTS

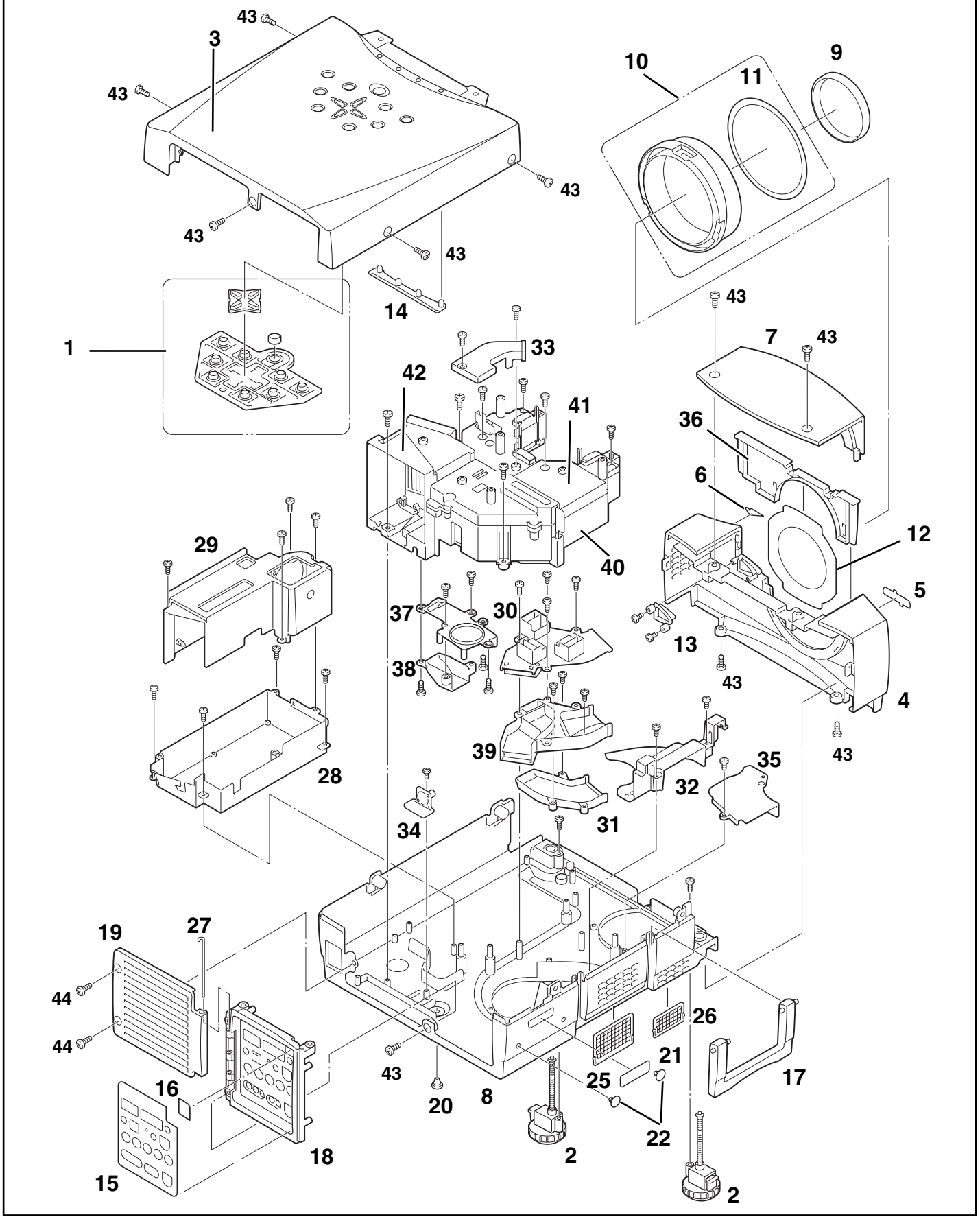

Mechanical Parts List

Key No.	Part No.	Description
CABINET PARTS		
1	610 293 5493	ASSY,BUTTON-MA8A
2	610 299 6234	COMPL,STAND LEG-MA8K
3	610 306 3454	CABINET TOP-ME5A
4	610 315 9768	CABINET FRONT SERVICE-ME5A
	(Including Key No. 5, 6)	
5	645 048 6043	BADGE,SANYO*35.0X7.5L35.0
6	610 289 1812	BADGE V MARK S-MK6A
7	610 293 5585	CABINET FRONT A-MA8A
8	610 297 3921	CABINET BOTTOM-MA8AA
9	610 277 2203	CAP LENS-M6SAA
10	610 296 5872	COVER CABINET FRONT SRV-MA
	(Including Key No. 11)	
11	610 294 5225	DEC RING-MA8A
12	610 285 3735	COVER LNS A-MM6A(B04301)
13	610 293 5899	DEC INLAY RC-MA8A
14	610 293 5912	DEC INLAY LED-MA8A
15	610 308 1205	DEC AV SHEET-MR3A
16	610 293 5936	DEC SHEET RC-MA8A
17	610 310 5598	COMP,HANDOL SERVICE-MA8A
18	610 293 5615	PANEL AV-MA8A
19	610 293 5622	PANEL FAN-MA8A
20	610 293 9972	SPACER LEG-MA8A
21	610 297 7929	SPACER COVER NWMG-MA8AA
22	610 297 7936	SPACER COVER SCREW NWMG-M
SCREWS -CABINET-		
43	411 098 1402	SCR S-TPG BIN 4X10
44	412 063 7900	SPECIAL SCREW(SILVER)NI
45	412 070 2509	SPECIAL SCREW

Key No.	Part No.	Description
CHASSIS PARTS		
23	610 306 5182	COMPL,HOLDER LNS A MR3A
	(Including Key No.23-a to d)	
23-a	610 306 5946	COMPL,HOLDER LNS BASE MR3
23-b	610 306 6639	ASSY,PWB,LENS-BASE NET MR
23-c	610 306 5953	ASSY,HOLDER MTR-MR3A
23-d	645 060 3785	UNIT,MOUNTING LNS BASE MR
24	610 306 6691	ASSY,MOUNTING LENS A-MR3A
	(Including Key No.24-a)	
24-a	610 306 5922	ASSY,PWB,BASE NET MR3A
25	610 303 8773	ASSY,PANEL NET A-MA8AA
26	610 303 8780	ASSY,PANEL NET B-MA8AA
27	610 293 6131	MOUNTING SHAFT-MA8A
28	610 293 6162	MOUNTING POW BTM-MA8A
29	610 299 5381	MOUNTING POW TOP-MA8AA
30	610 309 7701	MOUNTING DUCT TOP-MR3A
31	610 293 6209	MOUNTING DUCT B COVER-MA8
32	610 293 6216	MOUNTING DUCT FAN A-MA8A
33	610 308 9652	MOUNTING DUCT PBS-MR3A
34	610 293 6230	MOUNTING TEMP SW-MA8A
35	610 293 6650	MOUNTING DUCT FAN B-MA8A
36	610 293 9934	MTG COVER LNS-MA8A
37	610 297 4003	MOUNTING DUCT LMP TOP-MA8
38	610 297 4010	MOUNTING DUCT LMP BTM-MA8
39	610 308 0062	MOUNTING DUCT BTM-MR3A
40	610 306 5403	OPTICAL BASE BTM-MA8AA-B
41	610 293 4847	OPTICAL BASE TOP-MA8A
42	610 299 2939	OPTICAL LAMP COVER-MA8AA
SCREWS -CHASSIS-		
46	411 190 4509	BOLT HEX-SCT+SW+W 2.5X6
47	411 189 6606	BOLT HEX-SCT 2.5X6
48	411 190 5407	SCR BIN 2X4

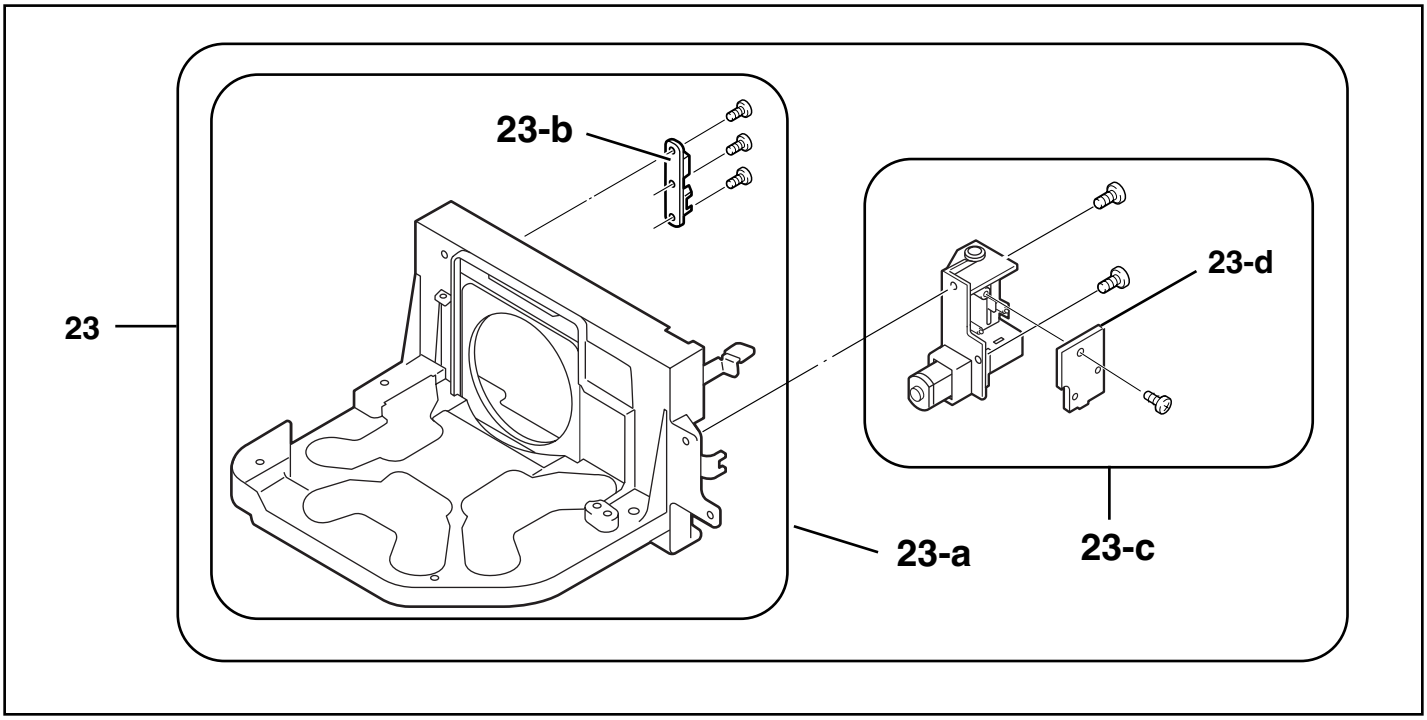

■ Optical Parts List

Key No.	Part No.	Description
	OPTICAL PARTS	
49	645 051 9420	ASSY,PRISM(PBS)
50	645 050 7502	LENS,CONDENSER (G)
	645 060 3143	LENS,CONDENSER (G)
51	645 024 9037	LENS,CONDENSER
52	645 047 2831	LENS,INTEGRATOR(IN)
53	645 047 2848	LENS,INTEGRATOR(OUT)
54	645 047 2855	LENS,CONDENSER(IN)
55	645 047 2862	LENS,CONDENSER(OUT)
56	645 047 2879	LENS,CONDENSER(R)
57	645 047 2886	LENS,RELAY(IN)
58	645 047 2893	LENS,RELAY(OUT)
59	645 044 2575	MIRROR(R)
60	645 047 7508	MIRROR(W-COLD)
61	645 047 7515	MIRROR(B)
62	645 073 6032	OPTICAL FILTER(UV CUT436)
63	645 072 6521	OPTICAL FILTER (WV/IN)RG
64	645 068 9390	POLARIZED GLASS(IN/R)
65	645 068 9406	POLARIZED GLASS(IN/G)
66	645 068 9413	POLARIZED GLASS(IN/B)
67	645 050 7892	DICHROIC MIRROR (G)
68	645 047 2923	DICHROIC MIRROR (B)
71	645 043 7144	ASSY,LENS,PROJECTION
	(Including Key No. 71-a, b)	
71-a	645 032 8664	MOTOR,LENS(Z,F) DC 0.2W
72	610 315 3063	ASSY,LCD PNL/PRISM-MH5A
	(Including Key No. 72-a to h)	
72-a	645 065 4466	OPTICAL FILTER (WV/OUT)R
72-b	645 066 7534	OPTICAL FILTER (WV/OUT)G
72-c	645 073 5882	OPTICAL FILTER (WV/OUT)B
72-d	645 068 9420	POLARIZED GLASS(OUT/R)
72-e	645 068 9437	POLARIZED GLASS(OUT/G)
72-f	645 068 9444	POLARIZED GLASS(OUT/B)
72-g	645 068 9451	PREPOLARIZED GLASS(G)
72-h	645 075 4265	PREPOLARIZED GLASS(B)

DIFFERENCES BETWEEN THE MODELS

Key No.	Description	PLC-XP51	PLC-XP51L
9	CAP LENS	610 277 2203	Not used
12	COVER LENS	610 285 3735	610 298 4606
71	LENS PROJ.	645 043 7144	Not used
73	SPACER	Not used	412 062 4009

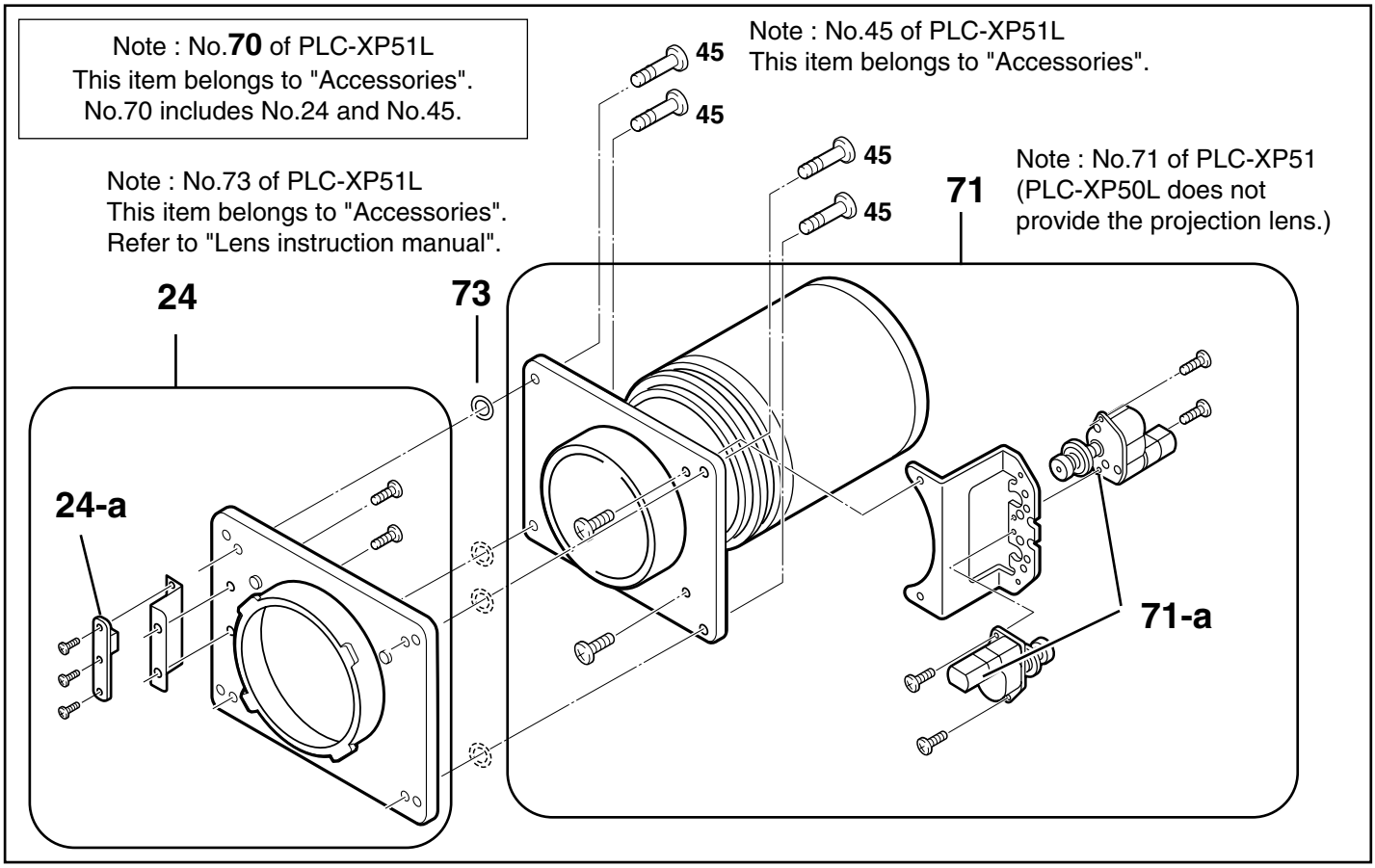

Optical Parts List

Note: Parts order must contain Chassis No., Part No., and Descriptions.

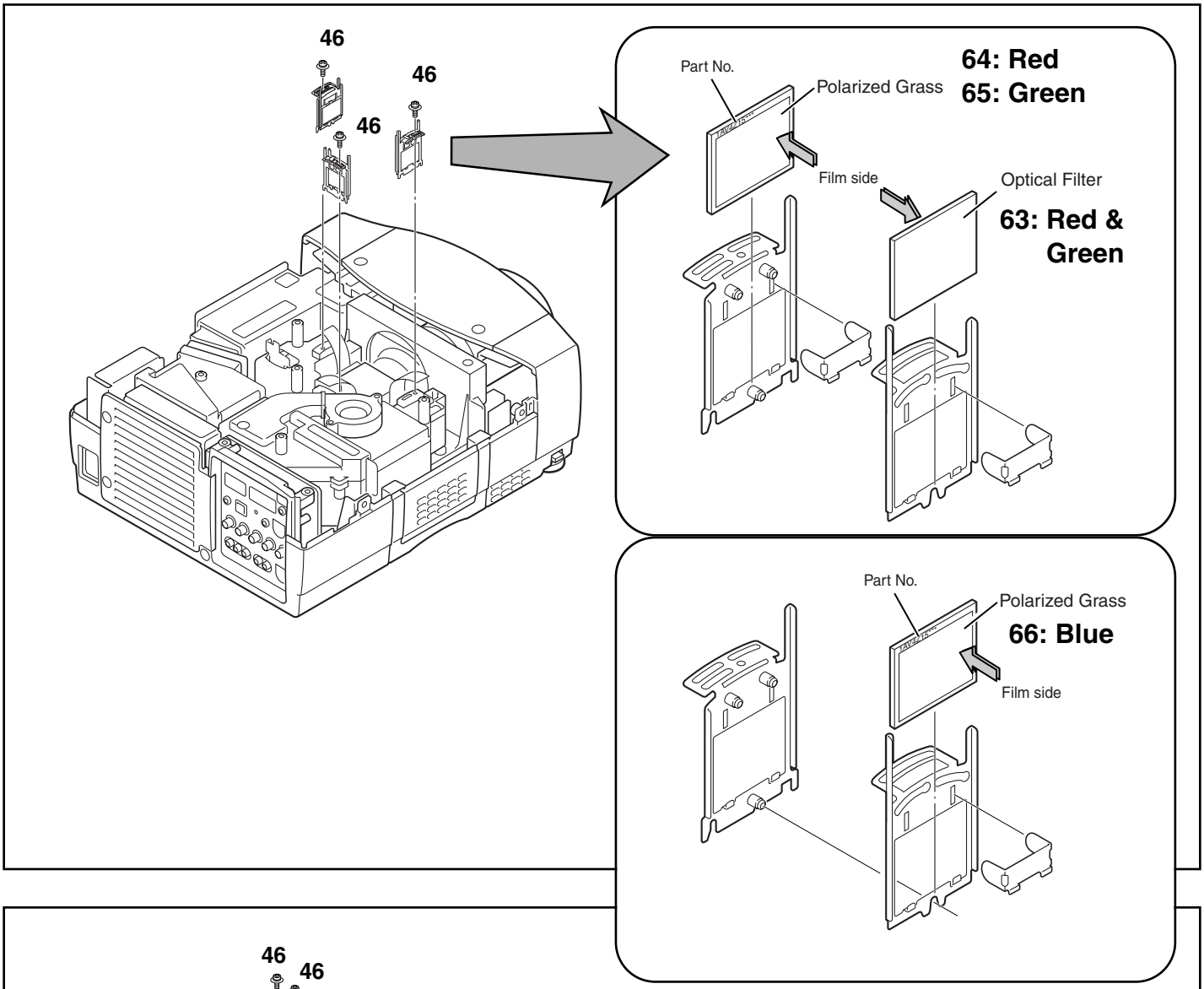

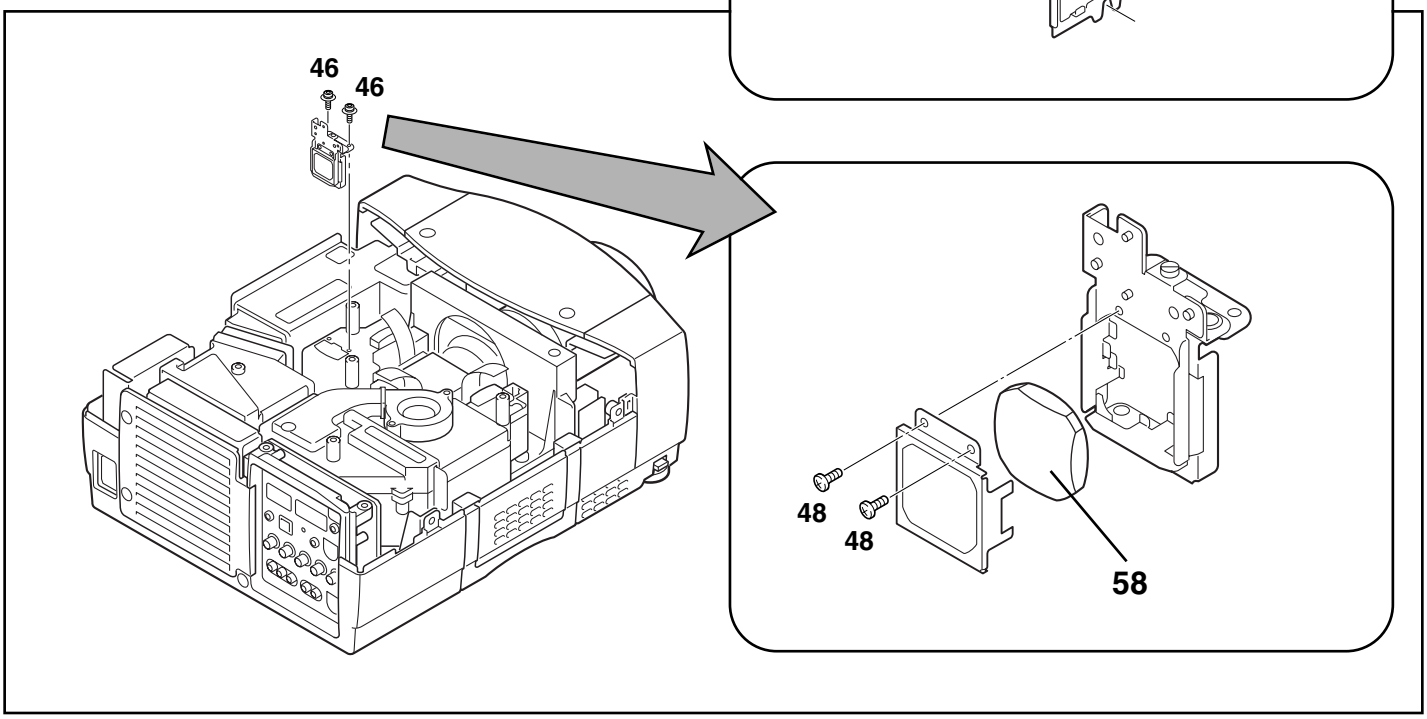

Optical Parts List

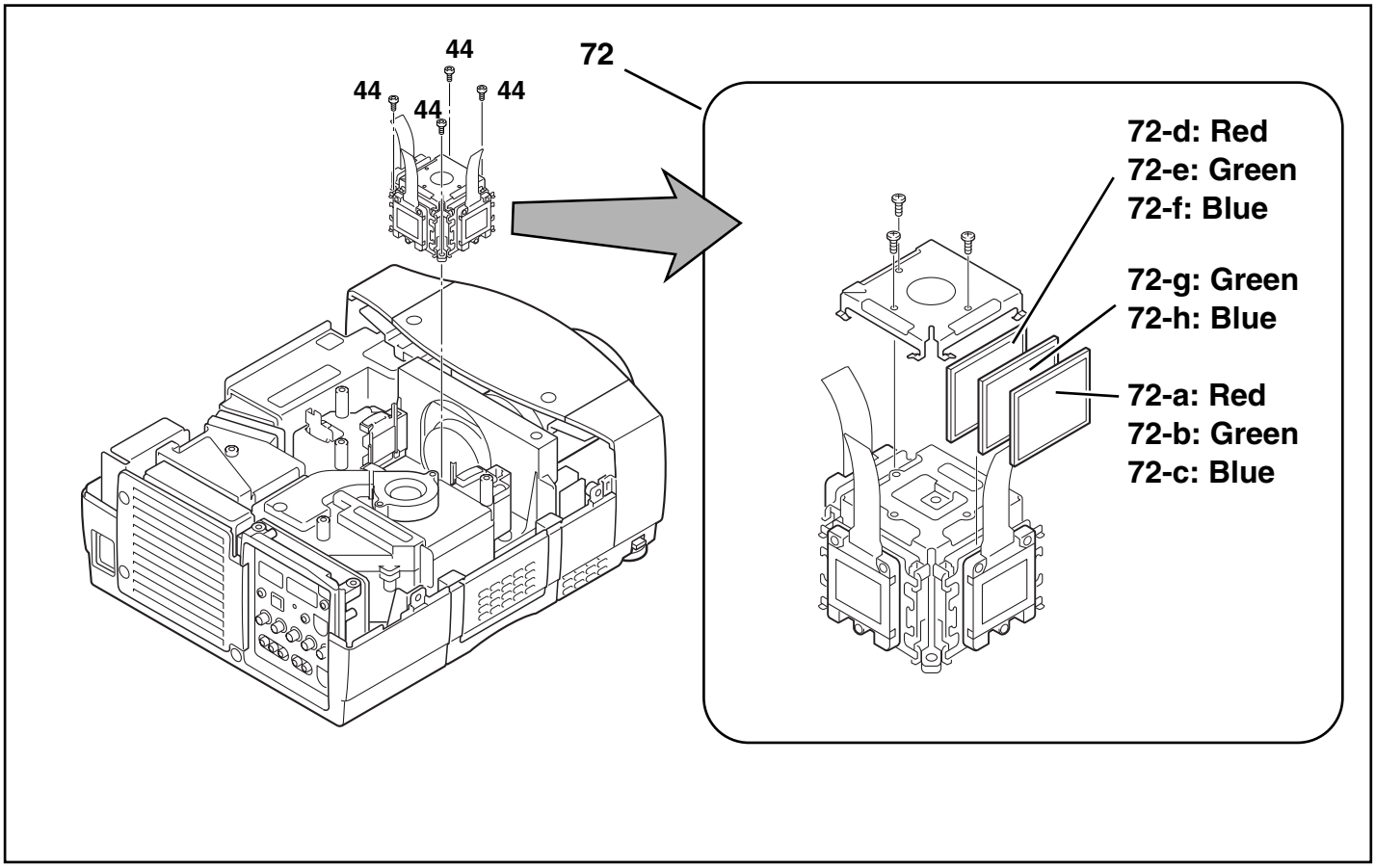

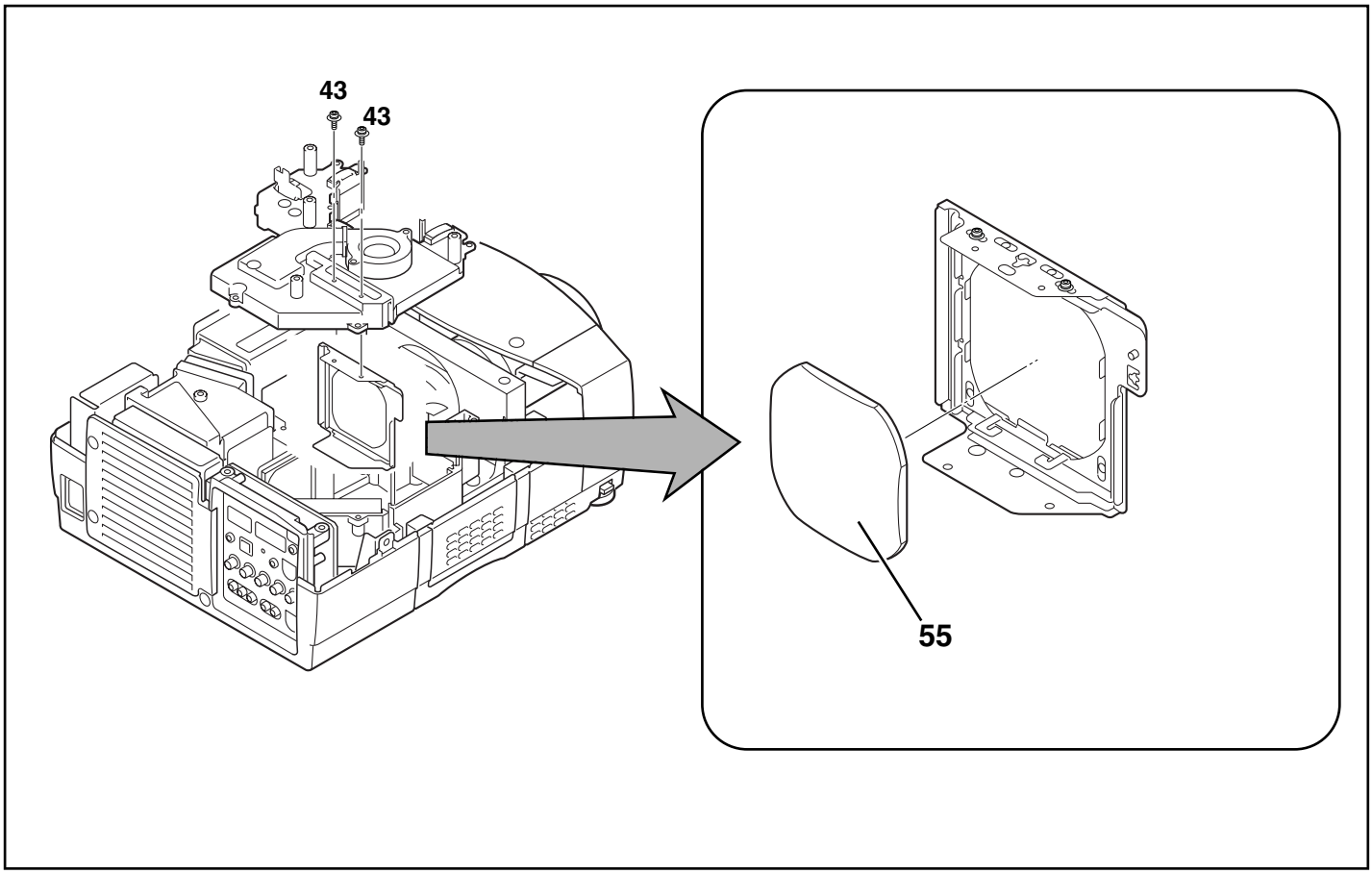

Optical Parts List

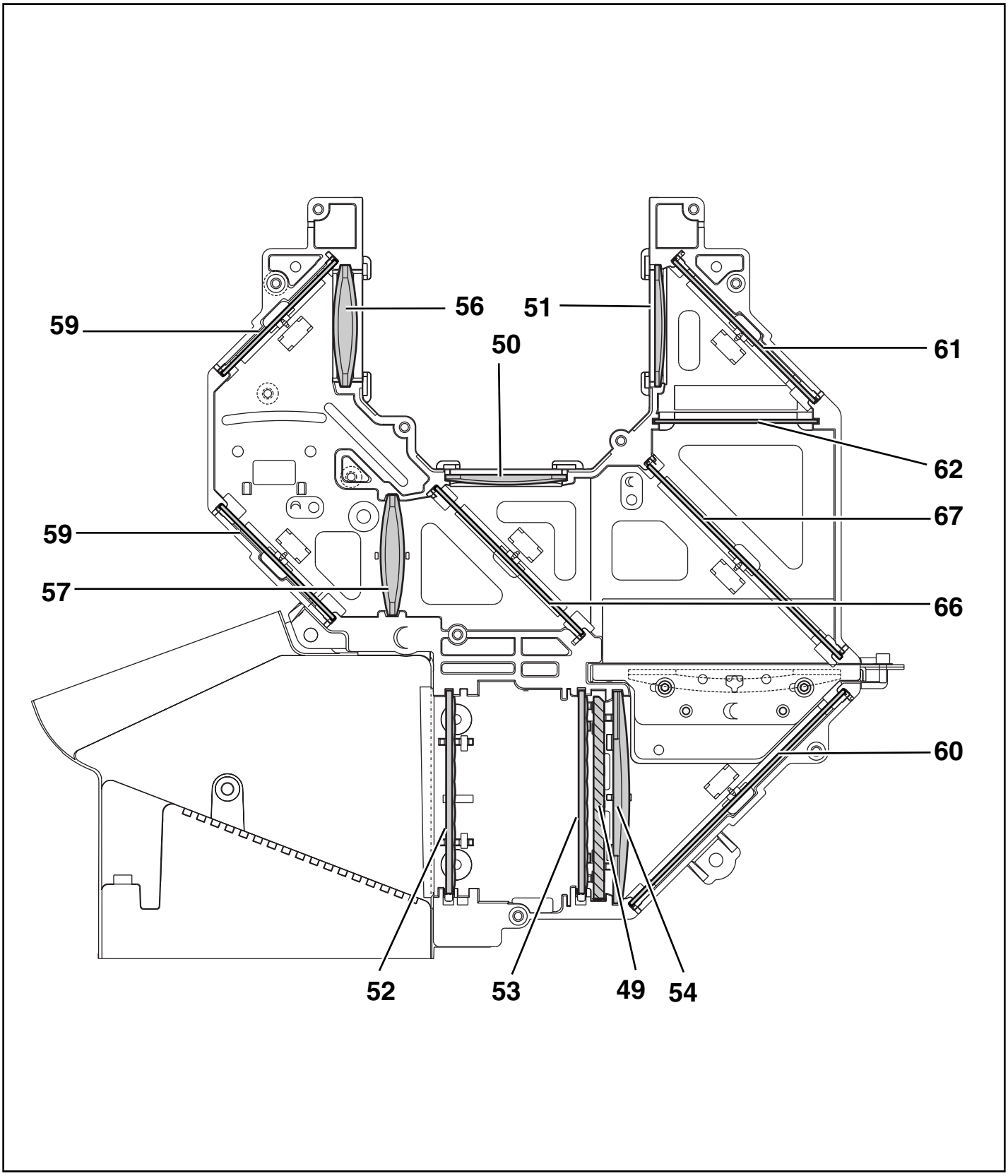

CAUTION:
Part must be placed in specified direction when replacing the optical parts. Please see “Optical Parts Disassemblies” for further instructions.

MEMO

(MH5A) DEC. 2004 BB 400 Printed in Japan

SANYO Electric Co., Ltd.

■ Diagrams & Drawings

Schematic Diagrams
Printed Wiring Board Drawings

Model	Chassis No.
PLC-XP51	MH5-XP5100

These schematic diagrams and printed wiring board drawings are part of the service manual original for chassis No. MH5-XP5100, model PLC-XP51.
File with the service manual No. SS5110715-00.

Note:
All the information of part numbers and values indicated on these diagrams are at the beginning of production. To improve the performance, there may be some differences to the actual set. When you order the service parts, use service parts code mentioned on the parts list in this service manual.

■ Parts description and reading in schematic diagram

1. The parts specification of resistors, capacitors and coils are expressed in designated code. Please check the parts description by the following code table.
2. Some of transistors and diodes are indicated in mark for the substitution of parts name. Please check the parts name by the following code table.
3. Voltages and waveforms were taken with a video color bar signal(1Vp-p at 75 ohms terminated) and controls to normal.
4. Voltages were taken with a high-impedance digital voltmeter.

Capacitor Reading

Example 2000 K K 1000 BG

Characteristic

Example 160 E M 10

Capacitance value

Excepting electric capacitors, all capacitance values of less than 1 are expressed in μF and more than 1 are in pF.

Tolerance

Type

Rated voltage

Material table

Mark	Material
E	Electrolytic
P	Electrolytic (non-polarized)
C	Ceramic (temperature compensation)
K	Ceramic
F	Polyester
N	Polypropylene
M	Metalized polypropylene
H	Metalized polypromylar
B	Ceramic (semiconductor)
G	Metalized polyestel
Y	Composite film
S	Styrol
T	Tantalum oxide solid electrolytic
U	Organic semiconductive electrolyte
D	Electric double layer electrolytic

Tolerance table

Mark	Tolerance	
A	not specified	
B	±0.1	
C	±0.25	
D	±0.5	
F	±1	
G	±2	
E	±2.5	
H	±3	
J	±5	
K	±10	
M	±20	
N	±30	
P	+100	-0
Q	+30	-10
T	+50	-10
U	+75	-10
V	+20	-10
W	+100	-10
X	+40	-20
Y	+150	-10
Z	+80	-20

Coil Reading

Example L2 C1 4R7 K N

Tolerance

Inductance value

Manufacture code

Unique code

Mark	Tolerance (nH)	Mark	Tolerance (%)
C	±0.25	G	±2
D	±0.5	J	±5
S	±0.3	K	±10
A	±0.2	L	±15
		M	±20

Resistor Reading

Example 1/2 D J 10K B

Characteristic

Example 6 W K 8.2

Z (Carbon fuse)

B (Non-burnable)

Example 1/2 C K 1M

K indicates in KΩ

M indicates in MΩ

Resistance value

Tolerance (see below table)

Material (see below table)

Rated wattage (W)

Note: Resistor which is indicated with resistance value only are 1/6W carbon resistor. Resistor which is indicated with material, tolerance and value are 1/4W rated wattage.

Material table

Mark	Material
D	Carbon
N	Metal film
S	Oxide metal film
C	Solid
G	Metal glaze
W	Wire wounding or cement
H	Ceramic
F	Fusible

Tolerance table

Mark	Tolerance
A	±0.05
B	±0.1
C	±0.25
D	±0.5
F	±1
G	±2
J	±5
K	±10
M	±20
P	+5 -15
Z	used in 0 ohm

Diode/Transistor Type Reading

Diode

Mark	Type number
R	1S2076A,1S2473,1N4148
AA	1S2076A,1S2473,1SS133,1N4148

Transistor

(1) NPN type

Mark	Type number				
--	2SC536	2SC945A	2SC1815	2SC1740S	
AD	NF, NG	PA, QA	Y, GR	Q, R, S	
AE	NF, NG	PA, QA, RA	O, Y, GR	Q, R, S	

(2) PNP type

Mark	Type number				
--	2SA608	2SA564A	2SA1015	2SA933S	
AB	NF	R	Y, GR	R	
AC	NF	Q, R	O, Y, GR	Q, R	

(3) Chip type

Mark	Type number				
--	2SA1179/N	2SA1037K	2SA1037AK	2SC2812/N	2SC2412K
AJ	M6, M7	R, S	R, S		
AH				L6, L7	R, S

■ Schematic Diagrams

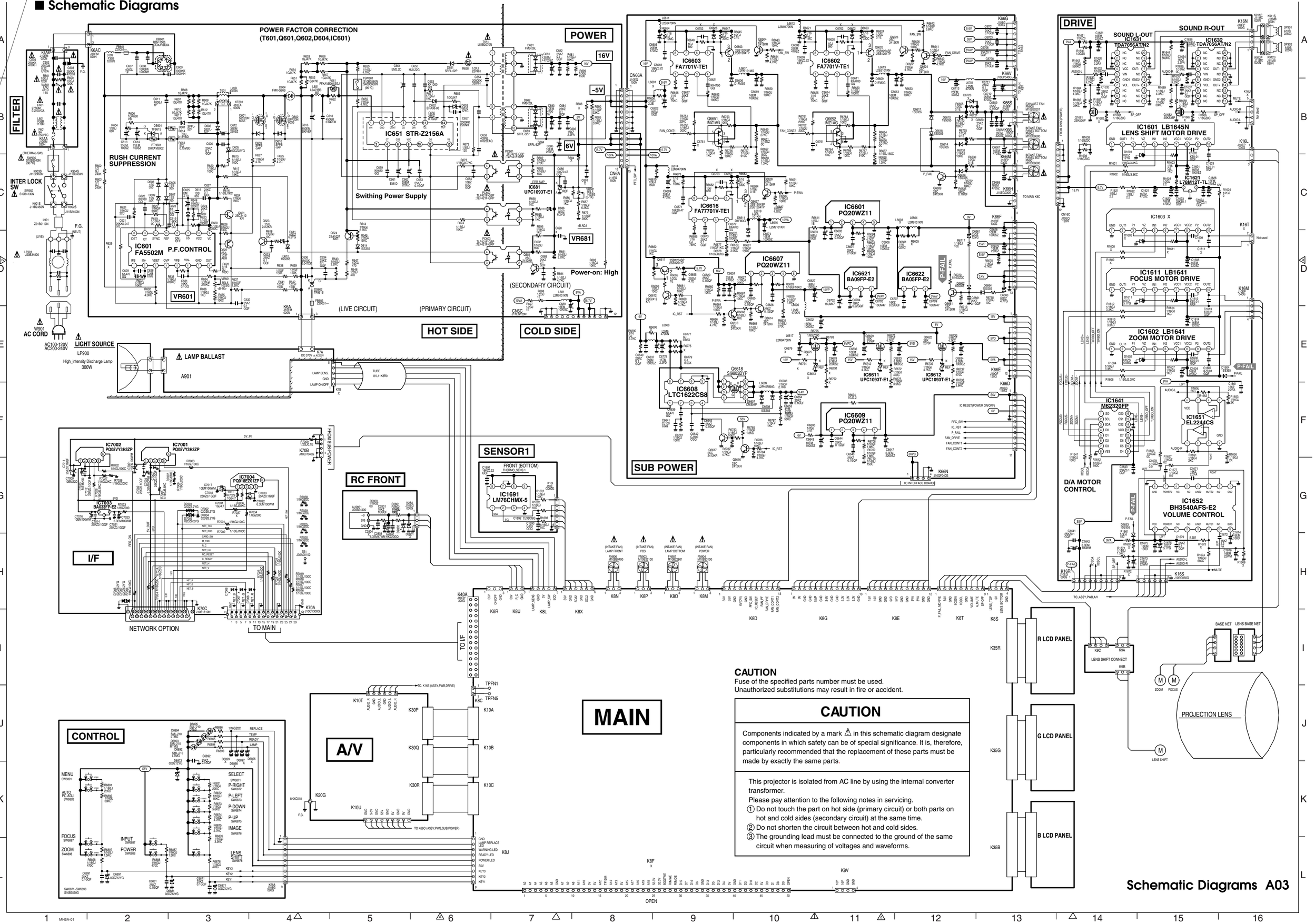

CAUTION

Fuse of the specified parts number must be used.
Unauthorized substitutions may result in fire or accident.

CAUTION

Components indicated by a mark ⚠ in this schematic diagram designate components in which safety can be of special significance. It is, therefore, particularly recommended that the replacement of these parts must be made by exactly the same parts.

This projector is isolated from AC line by using the internal converter transformer.
Please pay attention to the following notes in servicing.
① Do not touch the part on hot side (primary circuit) or both parts on hot and cold sides (secondary circuit) at the same time.
② Do not shorten the circuit between hot and cold sides.
③ The grounding lead must be connected to the ground of the same circuit when measuring of voltages and waveforms.

Schematic Diagrams A03

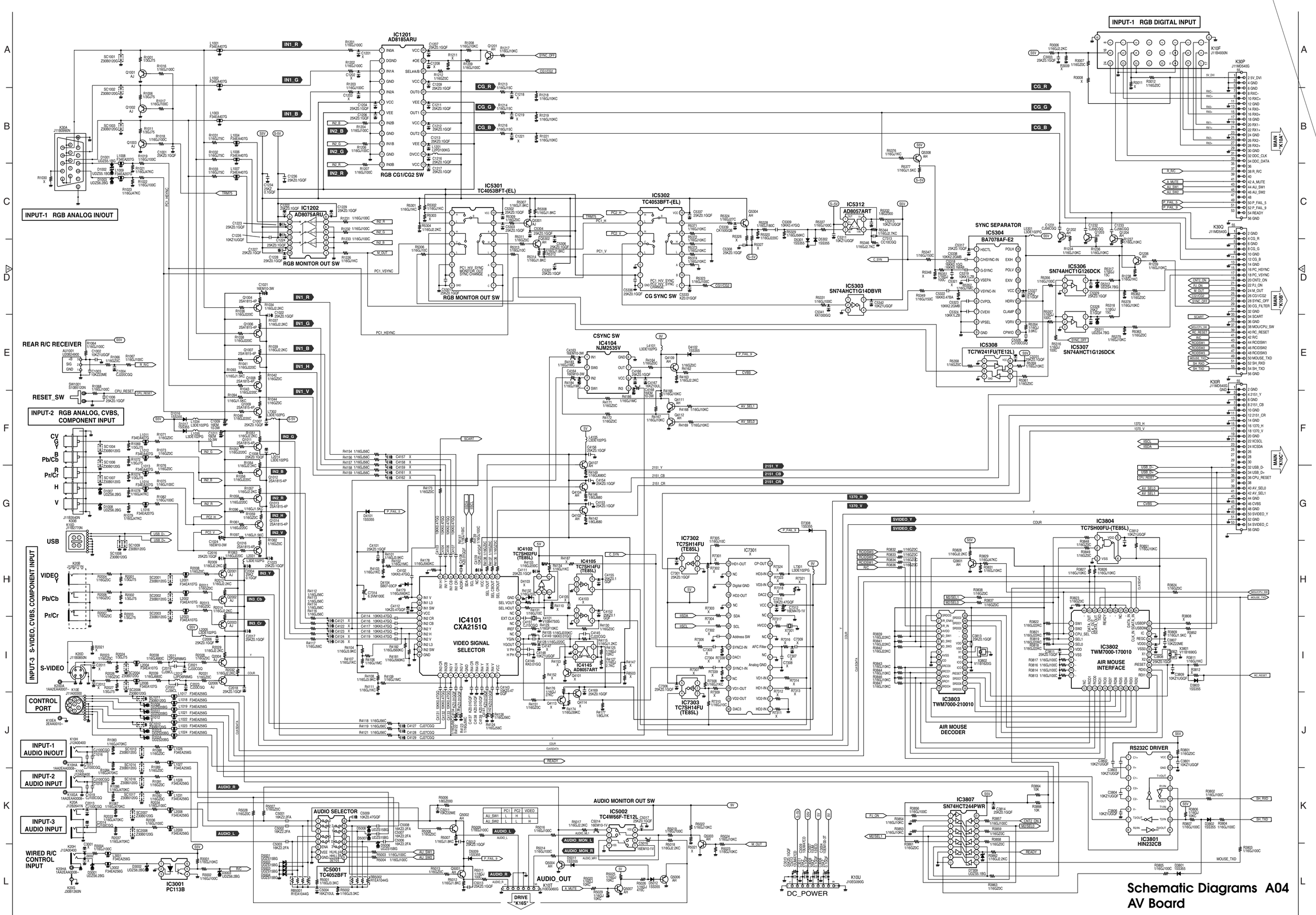
INPUT-1 RGB DIGITAL INPUT
INPUT-1 RGB ANALOG IN/OUT
INPUT-2 RGB ANALOG, CVBS, COMPONENT INPUT
INPUT-3 S-VIDEO, CVBS, COMPONENT INPUT
REAR R/C RECEIVER
RESET_SW
USB
VIDEO
S-VIDEO
CONTROL PORT
INPUT-1 AUDIO IN/OUT
INPUT-2 AUDIO INPUT
INPUT-3 AUDIO INPUT
WIRED R/C CONTROL INPUT
IC1201 AD8185ARU
RGB CG1/CG2 SW
IC1202 AD8075ARU
RGB MONITOR OUT SW
IC5301 TC4053BFT-(EL)
IC5302 TC4053BFT-(EL)
CG SYNC SW
IC5312 AD8057ART
SYNC SEPARATOR
IC5304 BA7078AF-E2
IC5306 SN74AHCT1G126DCK
IC5307 SN74AHCT1G126DCK
IC5303 SN74AHCT1G14DBVR
IC5308 TC7W241FU(TE12L)
CSYNC SW
IC4104 NJM2535V
IC4101 CXA2151Q
VIDEO SIGNAL SELECTOR
IC4102 TC7SH02FU (TE85L)
IC4105 TC7SH14FU (TE85L)
IC4145 AD8057ART
IC7302 TC7SH14FU (TE85L)
IC7301
IC7303 TC7SH14FU (TE85L)
IC3804 TC7SH00FU-(TE85L)
IC3802 TWM7000-170010
AIR MOUSE INTERFACE
IC3803 TWM7000-210010
AIR MOUSE DECODER
RS232C DRIVER
IC3801 HIN232CB
IC3807 SN74HCT244PWR
AUDIO SELECTOR
IC5001 TC4052BFT
IC3001 PC113B
AUDIO MONITOR OUT SW
IC5002 TC4W66F-TE12L
AUDIO_OUT
DC_POWER
DRIVE "K16S"
MAIN "K10A"
MAIN "K10B"
MAIN "K10C"
Schematic Diagrams A04
AV Board

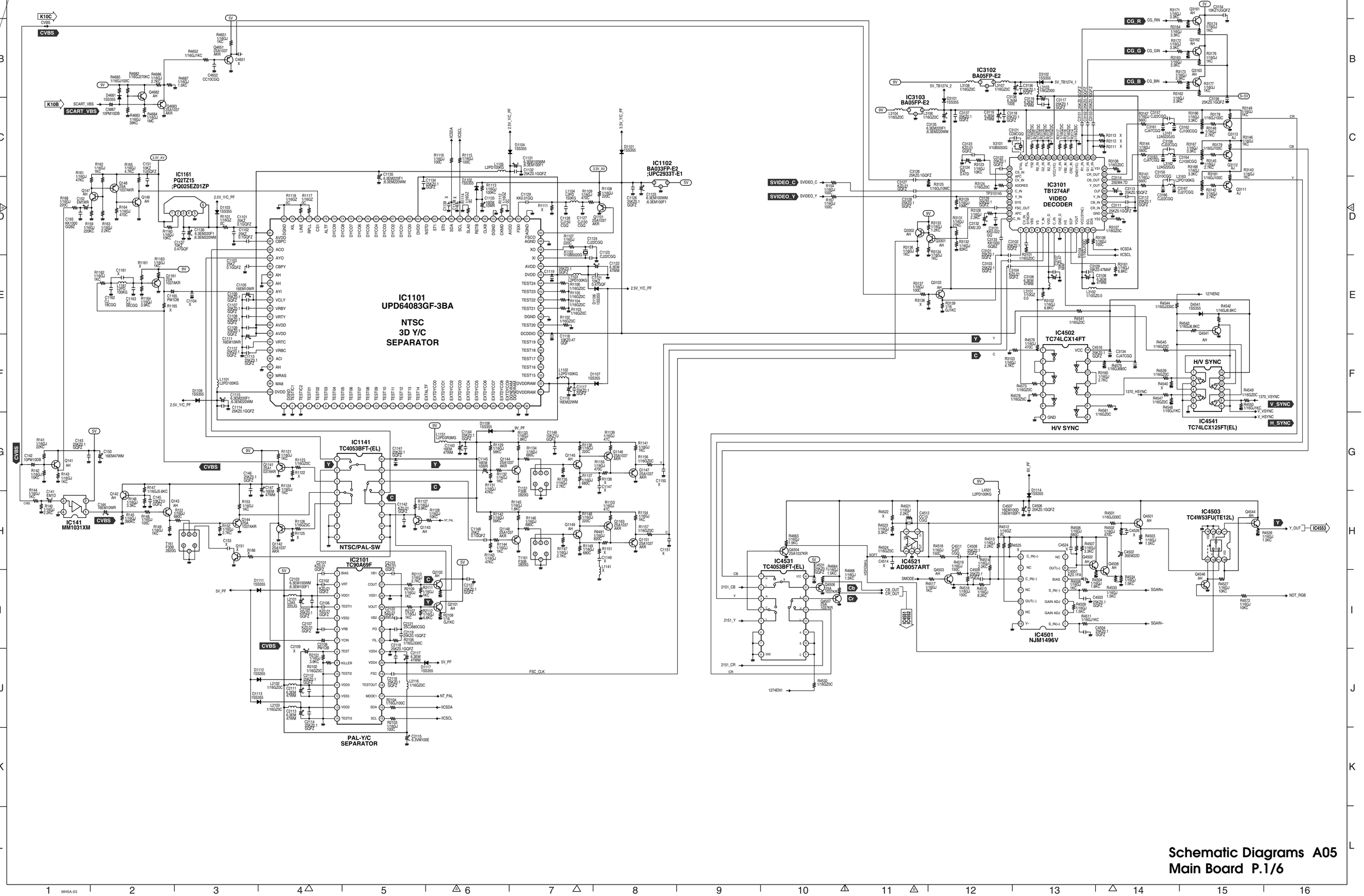

Schematic Diagrams A05
Main Board P.1/6

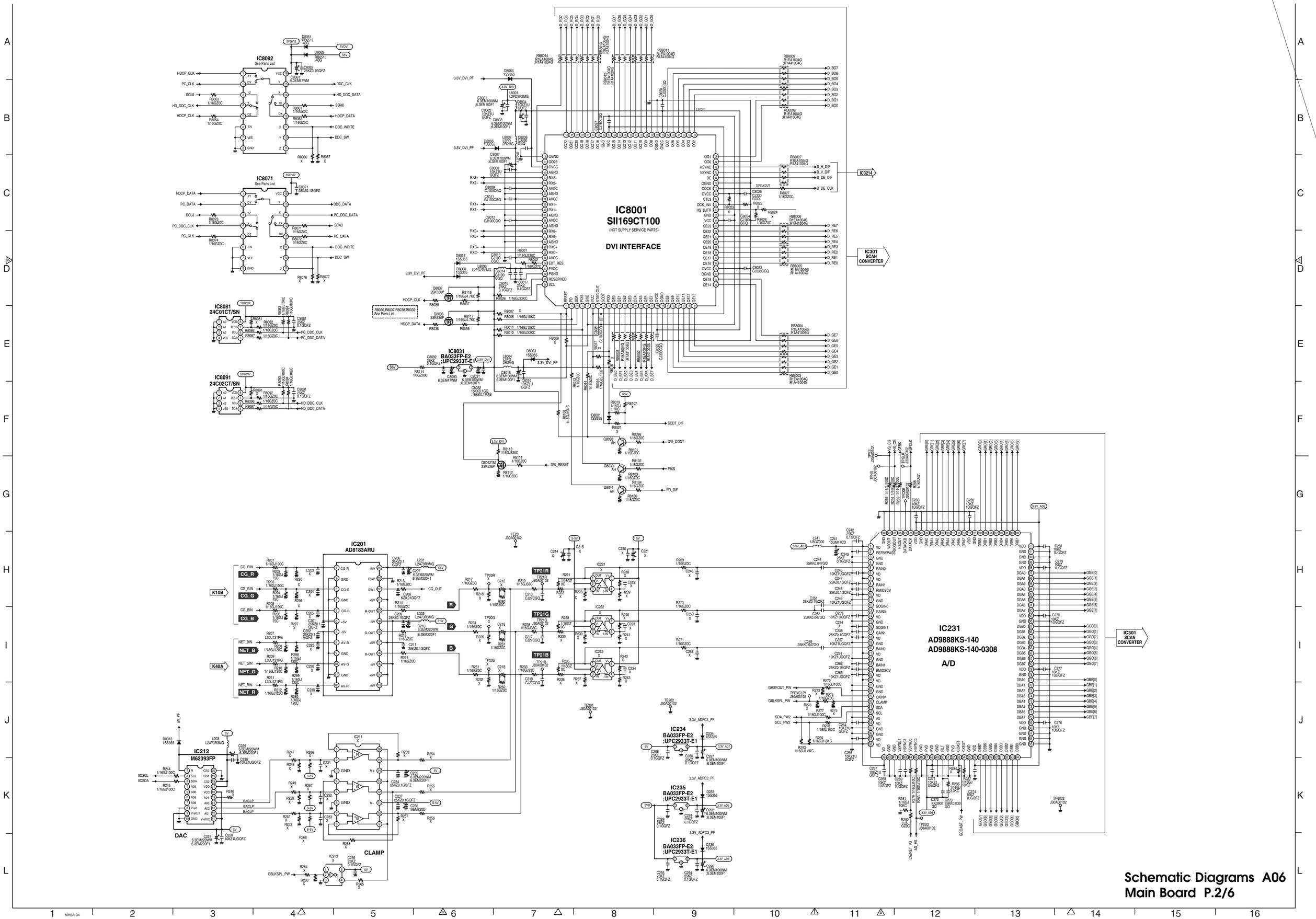
IC8092
See Parts List
IC8071
See Parts List
IC8081
24C01CT/SN
IC8091
24C02CT/SN
IC8001
SII169CT100
(NOT SUPPLY SERVICE PARTS)
DVI INTERFACE
IC8031
BA033FP-E2
;UPC2933T-E1
IC3214
IC301
SCAN
CONVERTER
IC201
AD8183ARU
IC212
M62393FP
DAC
CLAMP
IC231
AD9888KS-140
AD9888KS-140-0308
A/D
IC234
BA033FP-E2
;UPC2933T-E1
IC235
BA033FP-E2
;UPC2933T-E1
IC236
BA033FP-E2
;UPC2933T-E1
K10B
K40A
TP21R
TP21G
TP21B
Schematic Diagrams A06
Main Board P.2/6
MH5A-04
A6
SCH_MH5A/C

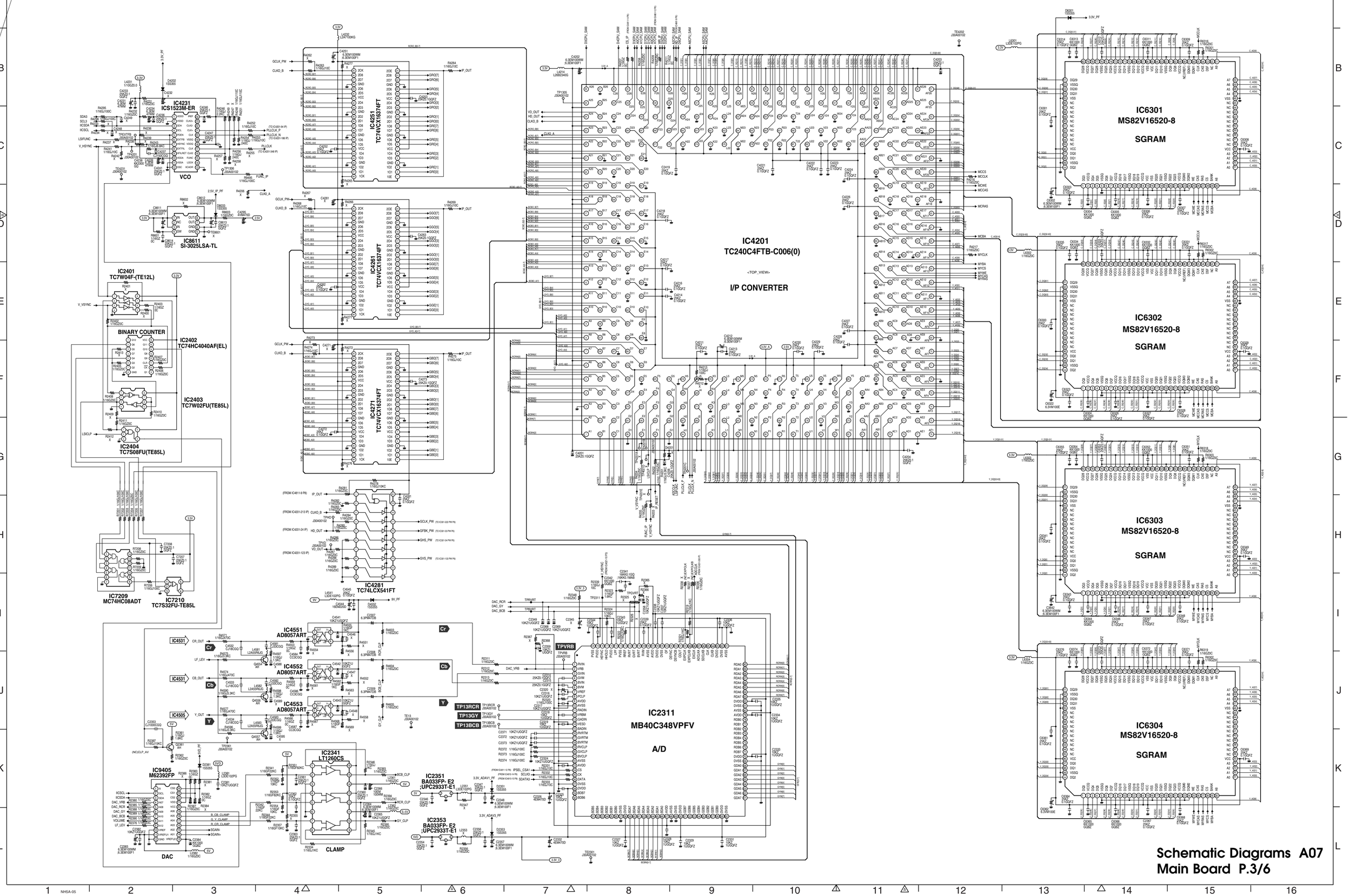
IC4231
ICS1523M-ER
VCO
IC8611
SI-3025LSA-TL
IC2401
TC7W04F-(TE12L)
IC2402
TC74HC4040AF(EL)
BINARY COUNTER
IC2403
TC7W02FU(TE85L)
IC2404
TC7S08FU(TE85L)
IC7209
MC74HC08ADT
IC7210
TC7S32FU-TE85L
IC4251
TC74VCX16374FT
IC4261
TC74VCX16374FT
IC4271
TC74VCX16374FT
IC4281
TC74LCX541FT
IC4201
TC240C4FTB-C006(0)
<TOP_VIEW>
I/P CONVERTER
IC6301
MS82V16520-8
SGRAM
IC6302
MS82V16520-8
SGRAM
IC6303
MS82V16520-8
SGRAM
IC6304
MS82V16520-8
SGRAM
IC4551
AD8057ART
IC4552
AD8057ART
IC4553
AD8057ART
IC2311
MB40C348VPFV
A/D
IC9405
M62392FP
DAC
IC2341
LT1260CS
CLAMP
IC2351
BA033FP- E2
;UPC2933T-E1
IC2353
BA033FP- E2
;UPC2933T-E1
Schematic Diagrams A07
Main Board P.3/6

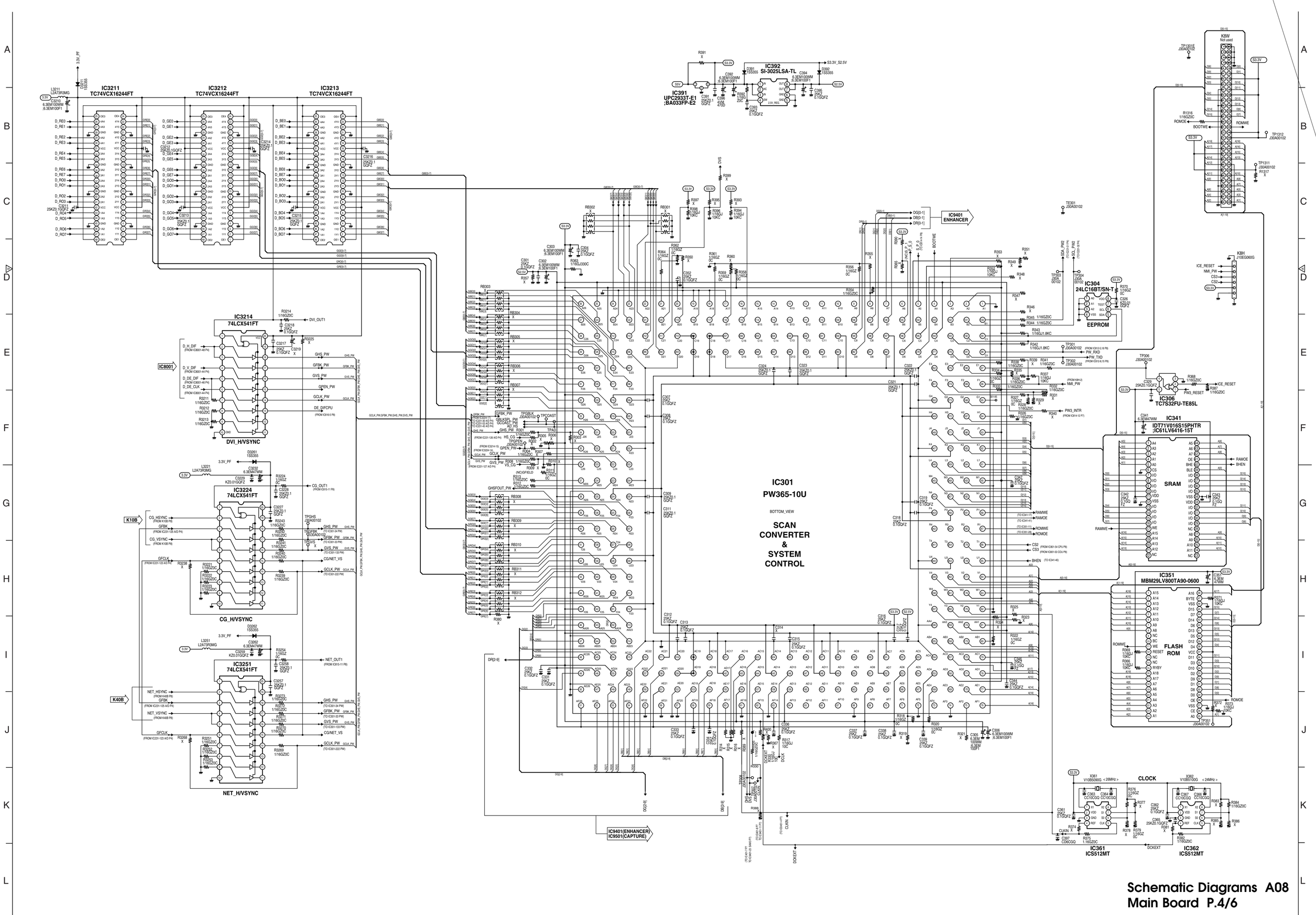

Schematic Diagrams A08
Main Board P.4/6

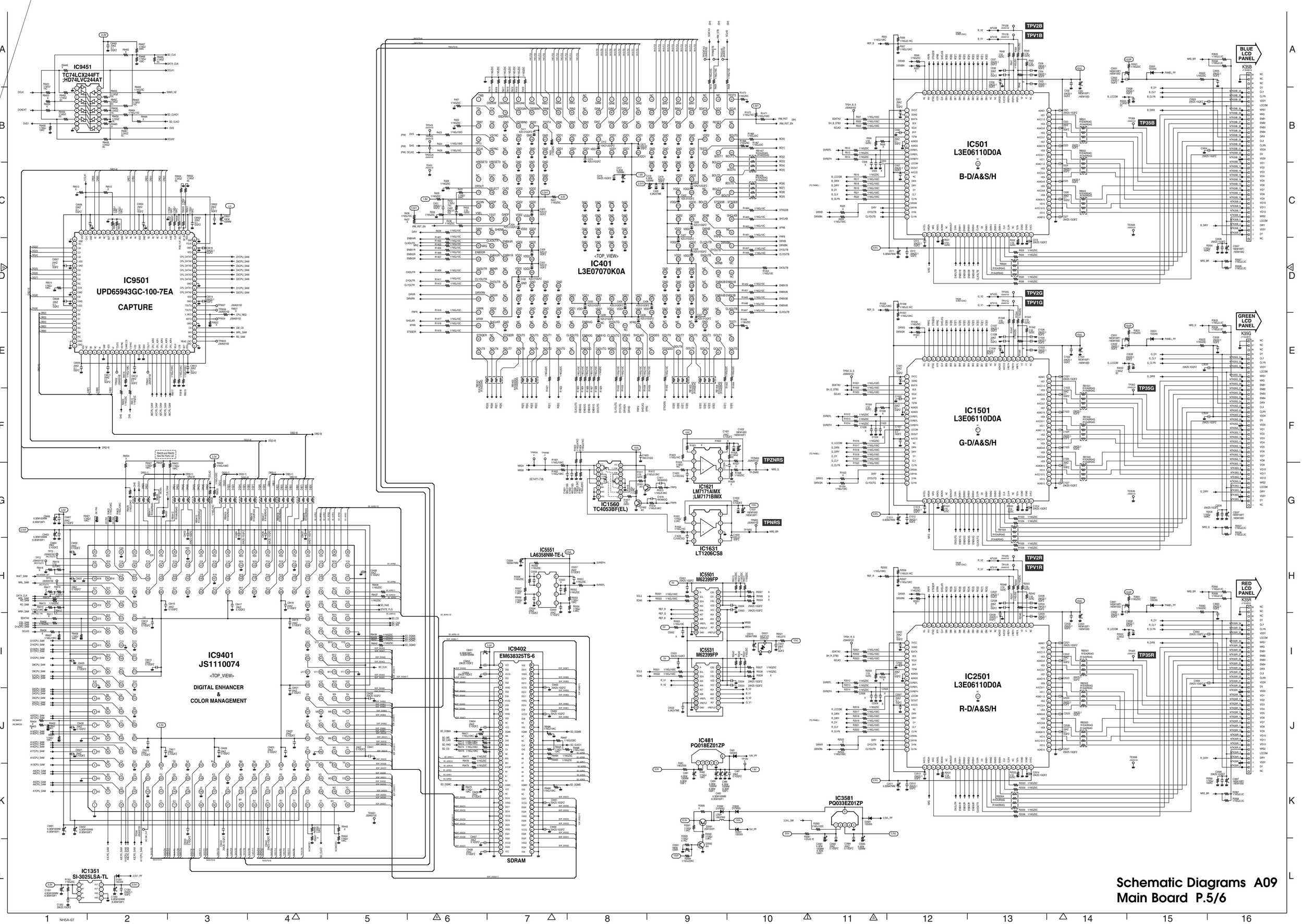

Schematic Diagrams A09
Main Board P.5/6

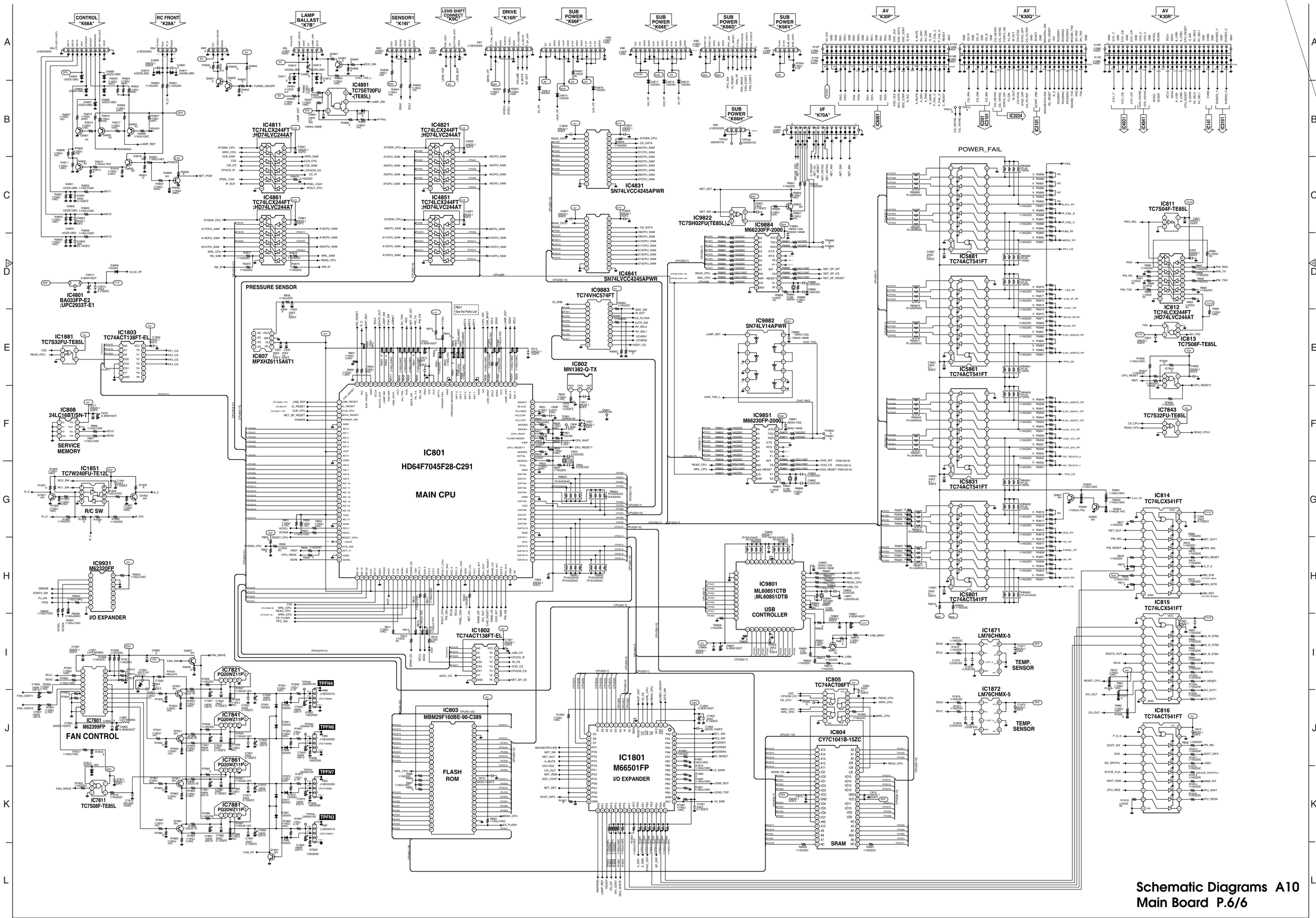
CONTROL "K68A"
RC FRONT "K28A"
LAMP BALLAST "K7B"
SENSOR1 "K16I"
LENS SHIFT CONNECT "K9C"
DRIVE "K16R"
SUB POWER "K66F"
SUB POWER "K66E"
SUB POWER "K66D"
SUB POWER "K66V"
SUB POWER "K66H"
AV "K30P"
AV "K30Q"
AV "K30R"
I/F "K70A"
IC4811 TC74LCX244FT ;HD74LVC244AT
IC4821 TC74LCX244FT ;HD74LVC244AT
IC4861 TC74LCX244FT ;HD74LVC244AT
IC4851 TC74LCX244FT ;HD74LVC244AT
IC4831 SN74LVCC4245APWR
IC4841 SN74LVCC4245APWR
IC4891 TC7SET00FU (TE85L)
IC9822 TC7SH02FU(TE85L)
IC9884 M66230FP-2000
IC9883 TC74VHC574FT
IC9882 SN74LV14APWR
IC9951 M66230FP-2000
IC4801 BA033FP-E2 ;UPC2933T-E1
IC1881 TC7S32FU-TE85L
IC1803 TC74ACT138FT-EL
IC807 MPXHZ6115A6T1
PRESSURE SENSOR
IC802 MN1382-Q-TX
IC801
HD64F7045F28-C291
MAIN CPU
IC808 24LC16BT/SN-T
SERVICE MEMORY
IC1851 TC7W240FU-TE12L
R/C SW
IC9931 M62320FP
I/O EXPANDER
IC9801 ML60851CTB ;ML60851DTB
USB CONTROLLER
IC1802 TC74ACT138FT-EL
IC7801 M62399FP
FAN CONTROL
IC7821 PQ20WZ11P
IC7841 PQ20WZ11P
IC7861 PQ20WZ11P
IC7881 PQ20WZ11P
IC7811 TC7S08F-TE85L
IC803 MBM29F160BE-90-C389
FLASH ROM
IC1801 M66501FP
I/O EXPANDER
IC805 TC74ACT08FT
IC804 CY7C1041B-15ZC
SRAM
IC1871 LM76CHMX-5
TEMP. SENSOR
IC1872 LM76CHMX-5
TEMP. SENSOR
POWER_FAIL
IC5881 TC74ACT541FT
IC5861 TC74ACT541FT
IC5831 TC74ACT541FT
IC5801 TC74ACT541FT
IC811 TC7S04F-TE85L
IC812 TC74LCX244FT ;HD74LVC244AT
IC813 TC7S08F-TE85L
IC7843 TC7S32FU-TE85L
IC814 TC74LCX541FT
IC815 TC74LCX541FT
IC816 TC74ACT541FT
Schematic Diagrams A10
Main Board P.6/6

■ Printed Wiring Board Diagrams

FILTER (SIDE:A)

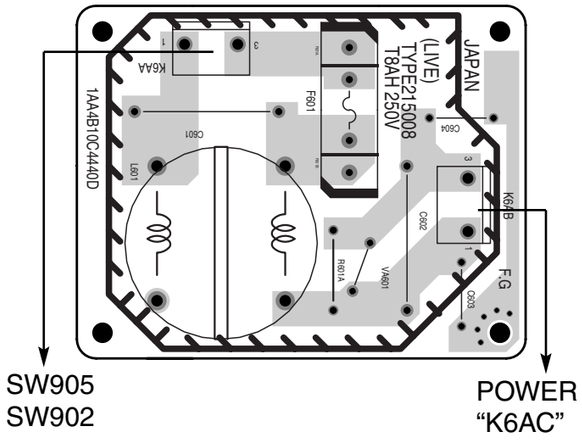

FILTER (SIDE:B)

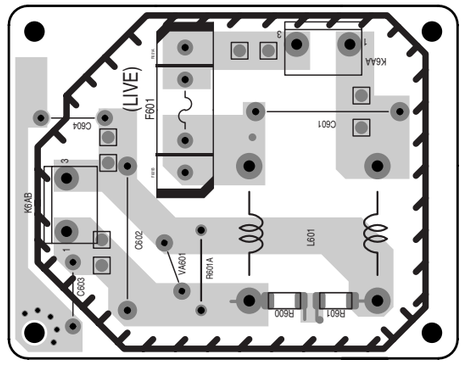

CONTROL (SIDE:A)

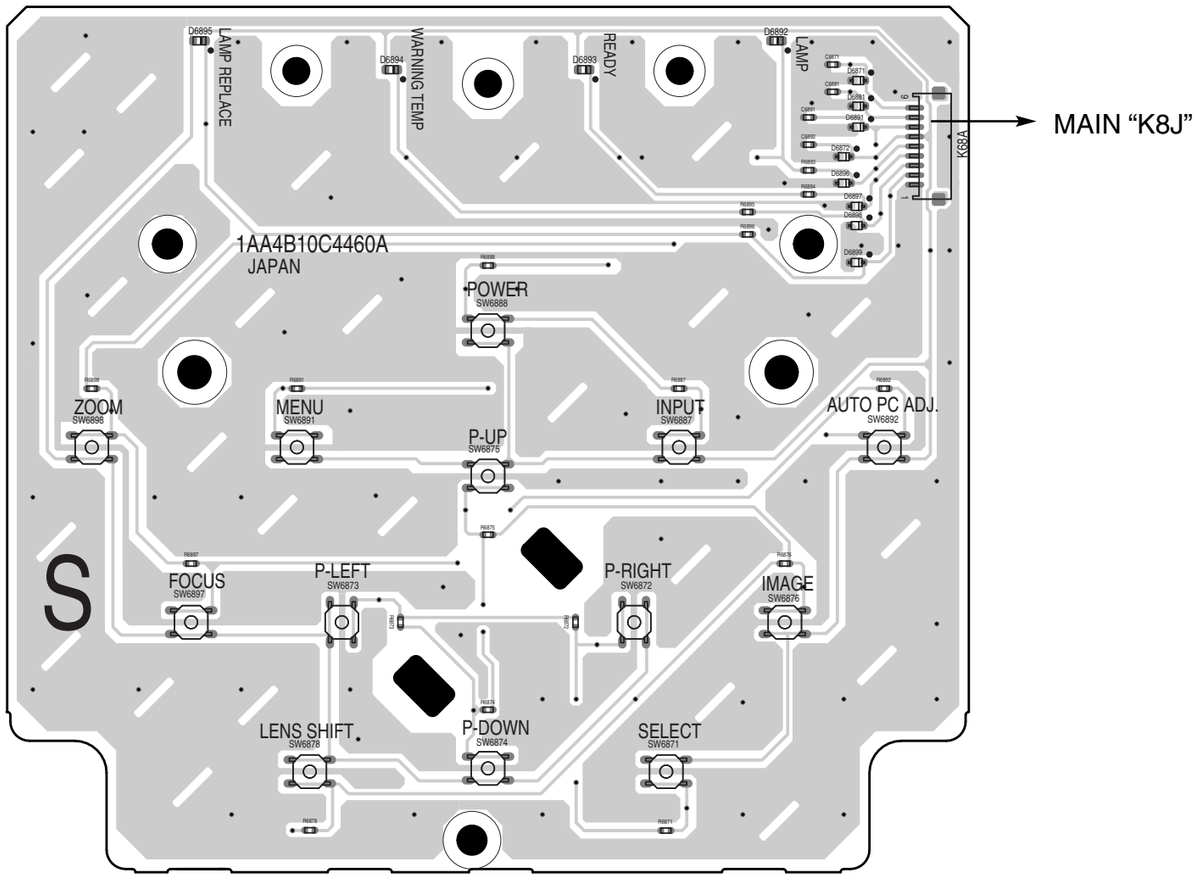

⚠ CAUTION

This projector is isolated from AC line by using the internal converter transformer. Please pay attention to the following notes in servicing

1. Do not touch the part on hot side (primary circuit) or both parts on hot and cold sides (secondary circuit) at the same time.
2. Do not shorten the circuit between hot and cold sides.
3. The grounding lead must be connected to the ground of the same circuit when measuring of voltages and waveforms.

RC FRONT (SIDE:A)

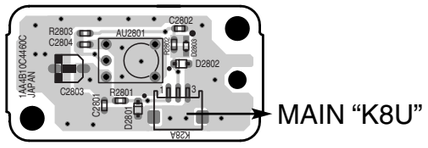

RC FRONT (SIDE:B)

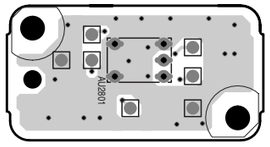

CONTROL (SIDE:B)

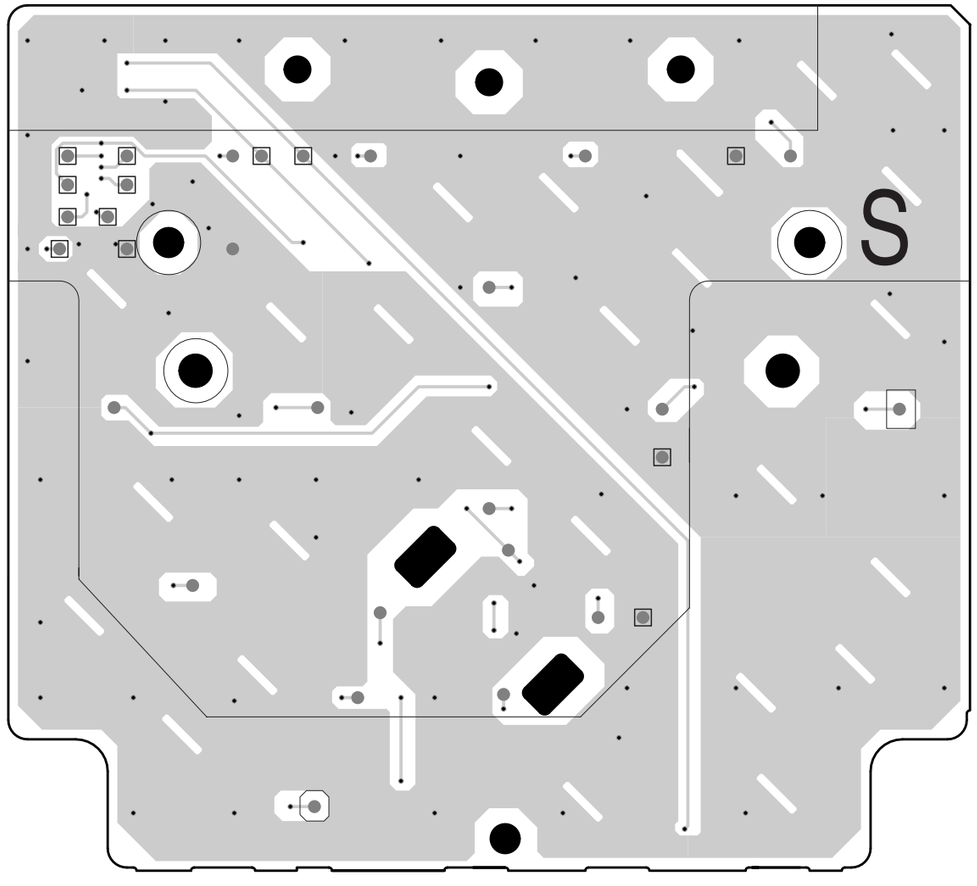

MAIN (SIDE:A)

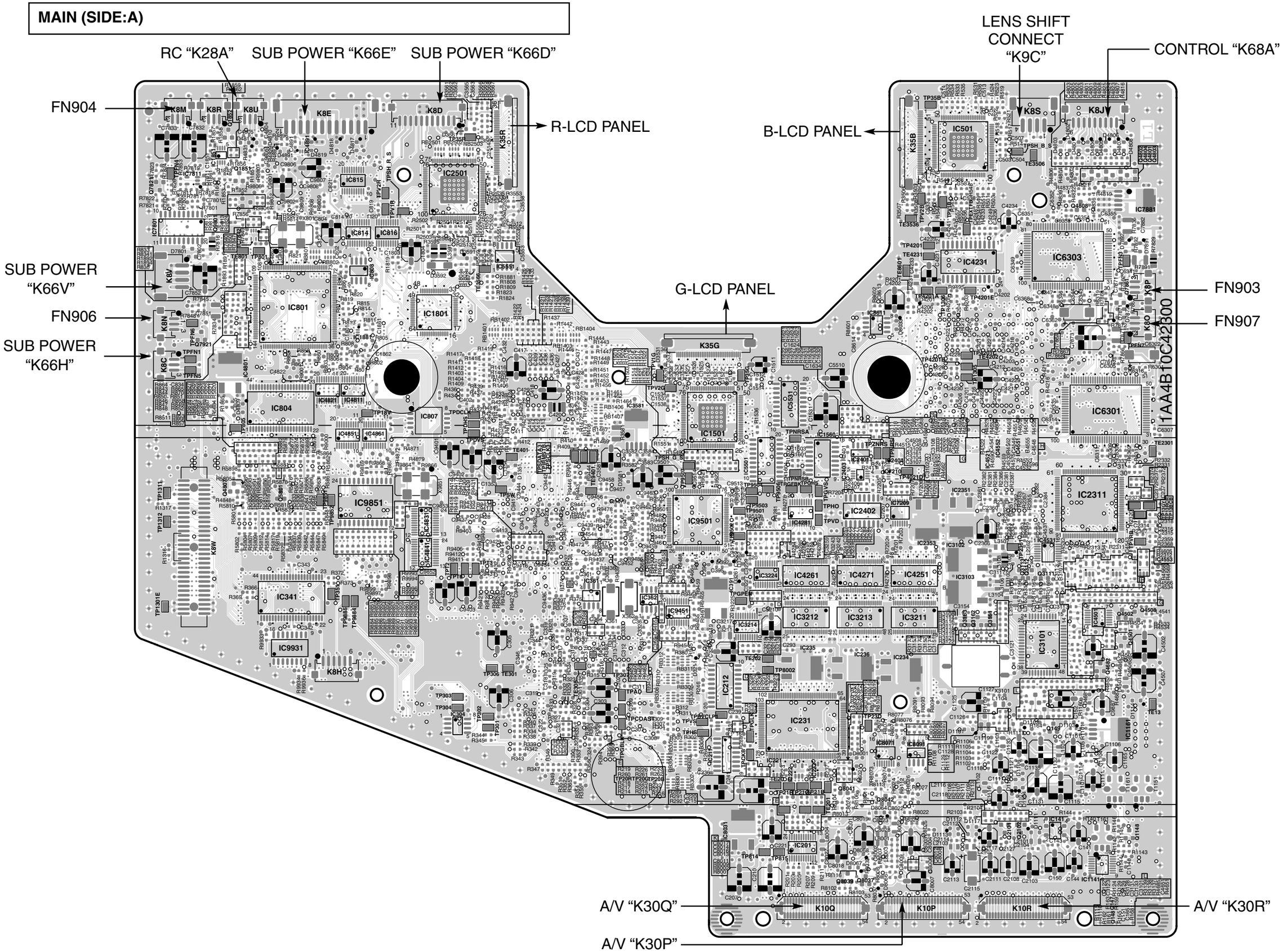
RC "K28A"
SUB POWER "K66E"
SUB POWER "K66D"
LENS SHIFT CONNECT "K9C"
CONTROL "K68A"
FN904
R-LCD PANEL
B-LCD PANEL
SUB POWER "K66V"
FN906
SUB POWER "K66H"
G-LCD PANEL
FN903
FN907
A/V "K30Q"
A/V "K30P"
A/V "K30R"
11AA4B10C42300

MAIN (SIDE:B)

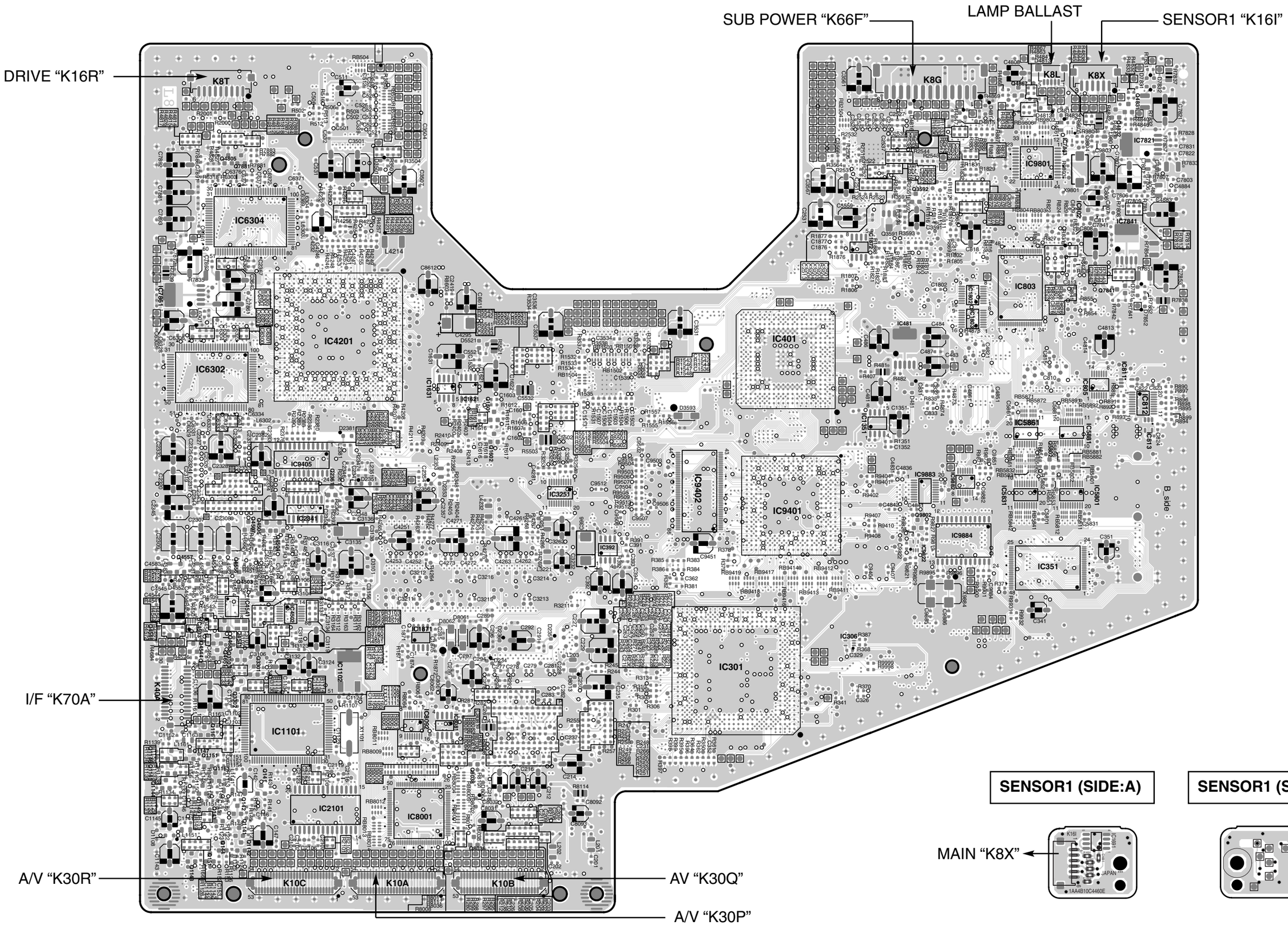

SENSOR1 (SIDE:A)

SENSOR1 (SIDE:B)

MAIN “K8X”

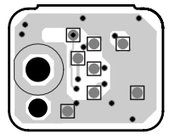

POWER (SIDE:A)

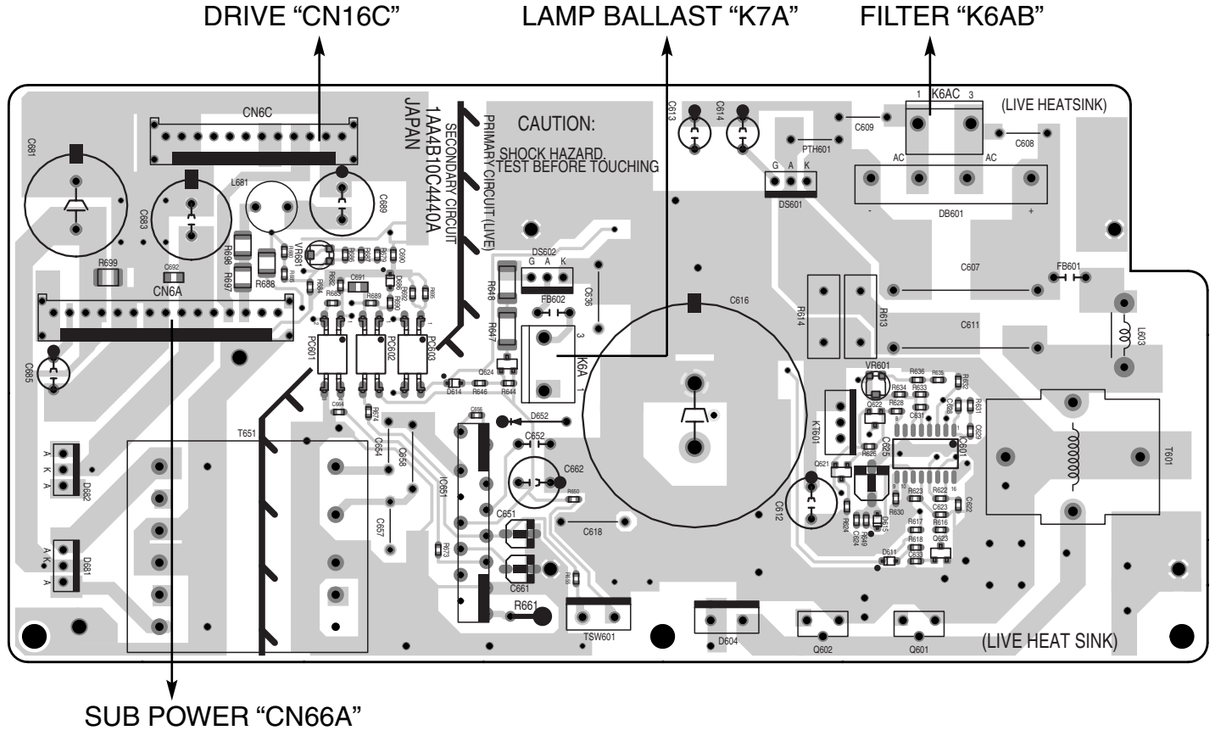

DRIVE (SIDE:A)

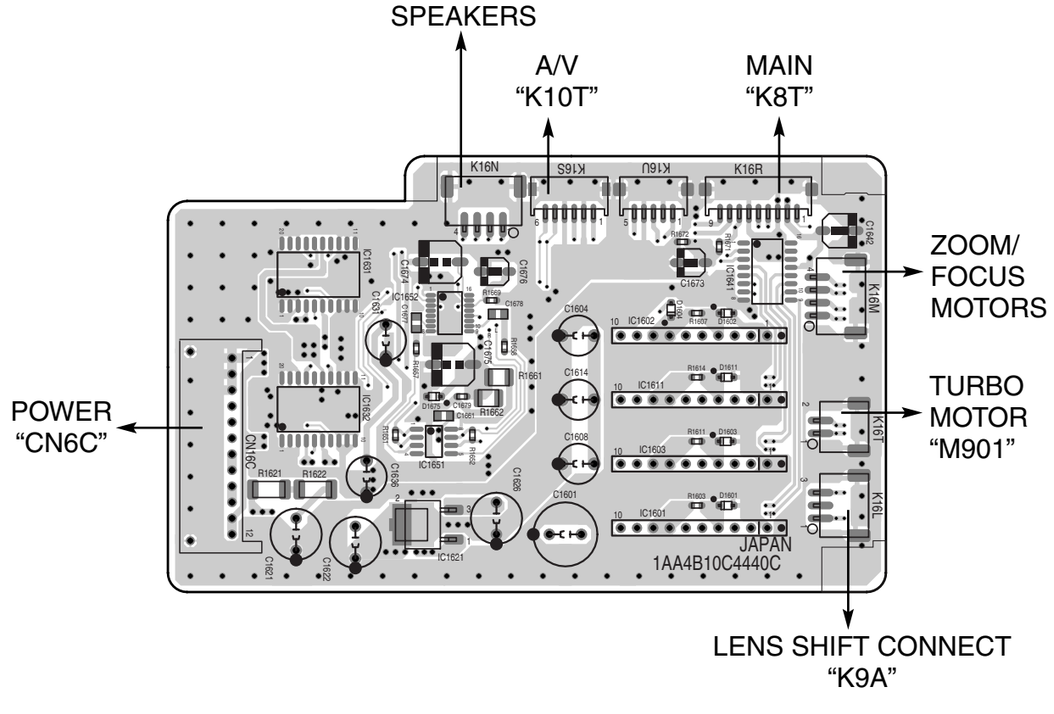

POWER (SIDE:B)

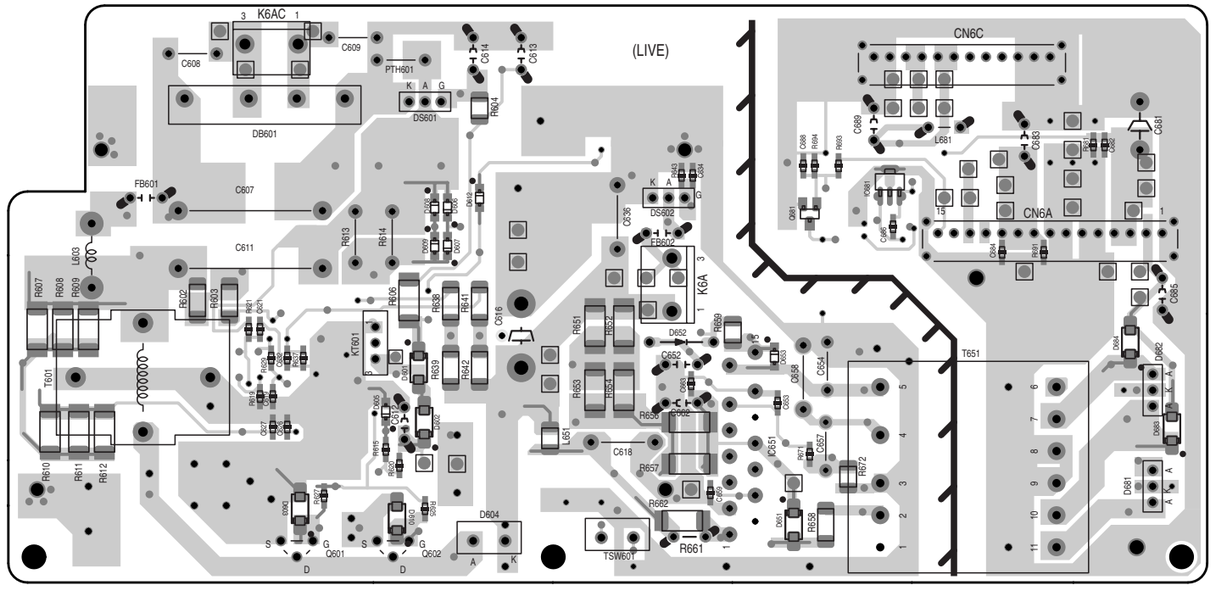

DRIVE (SIDE:B)

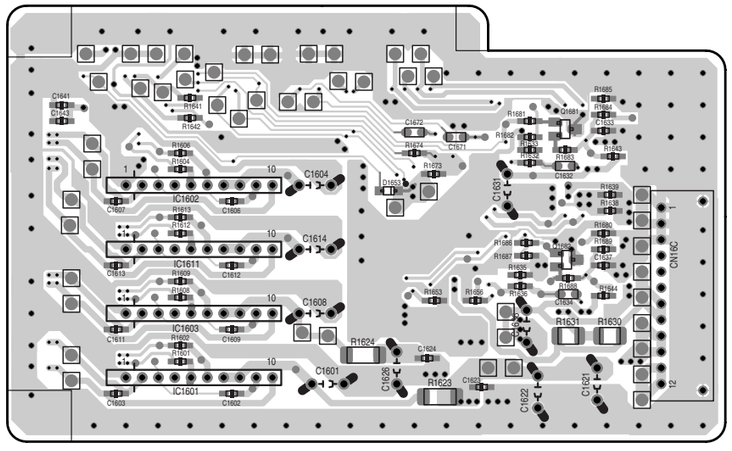

SUB POWER (SIDE:A)

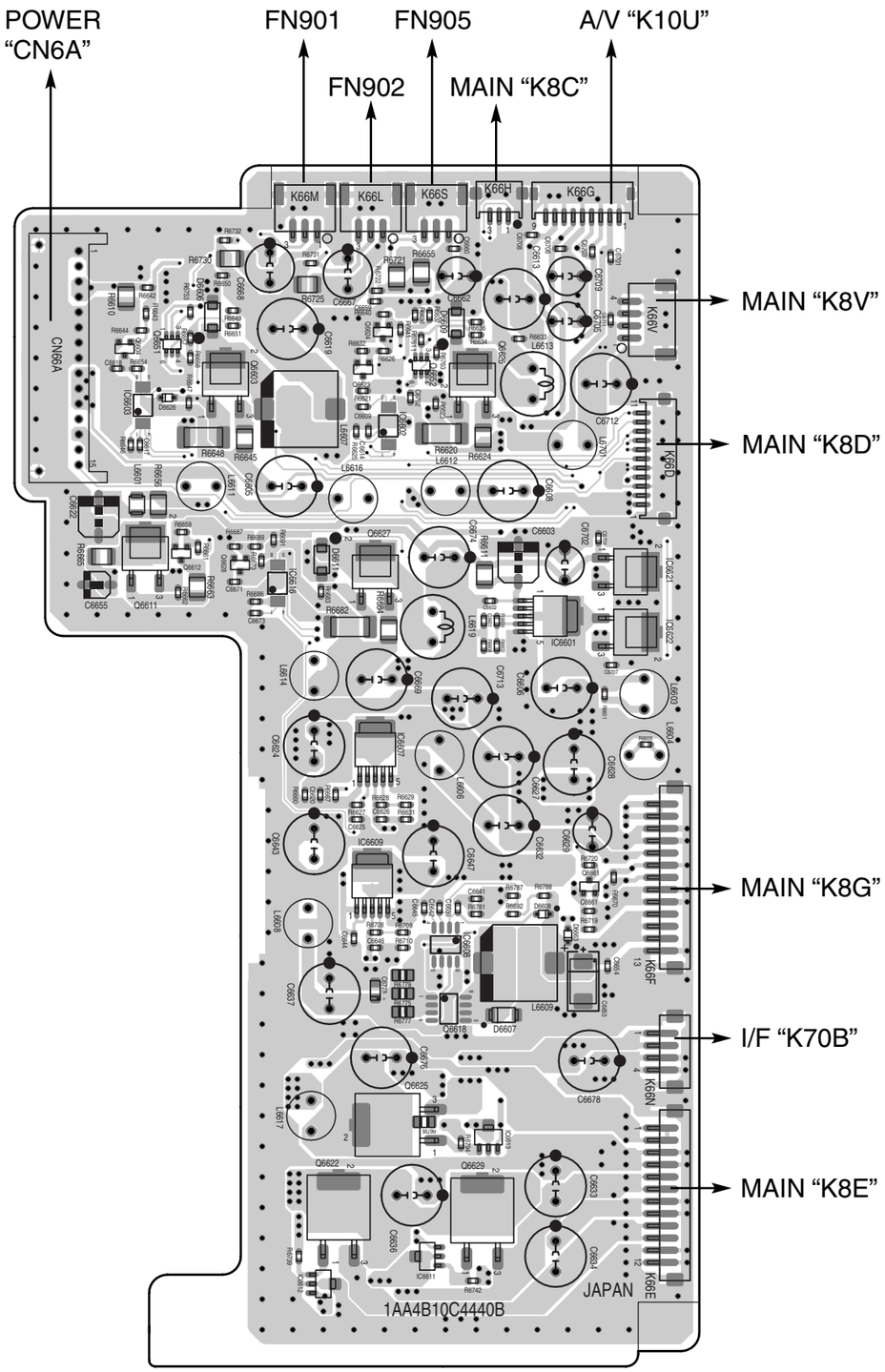

SUB POWER (SIDE:B)

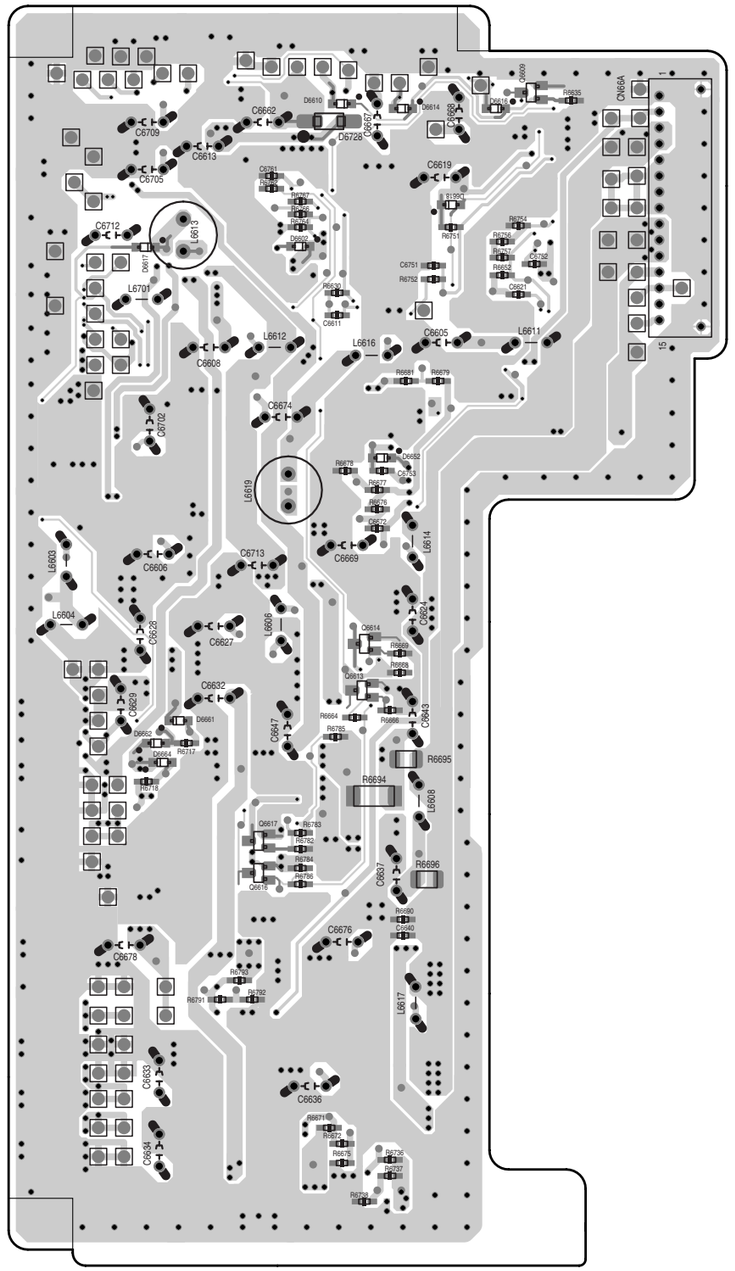

A/V (SIDE:A)

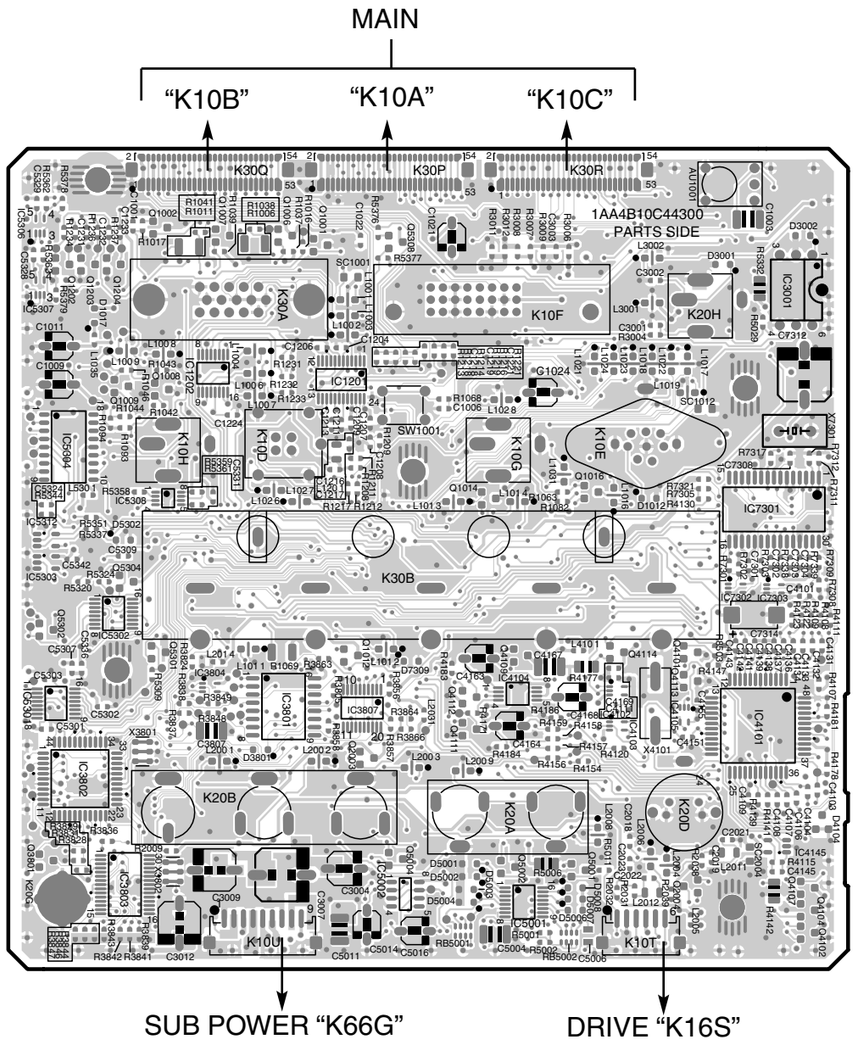

A/V (SIDE:B)

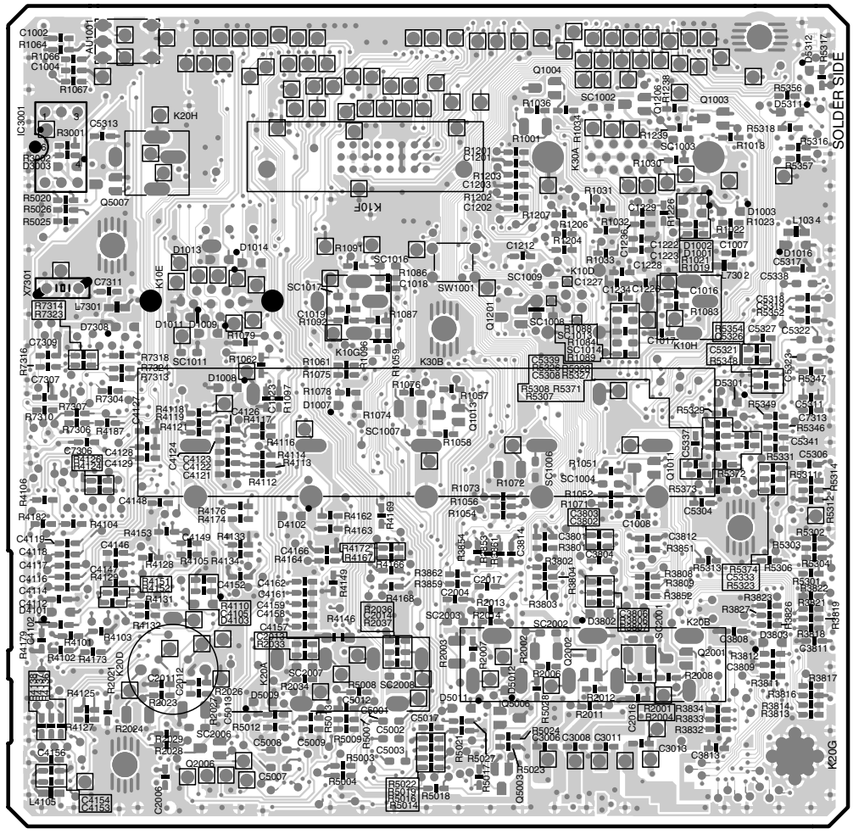

I/F (SIDE:A)

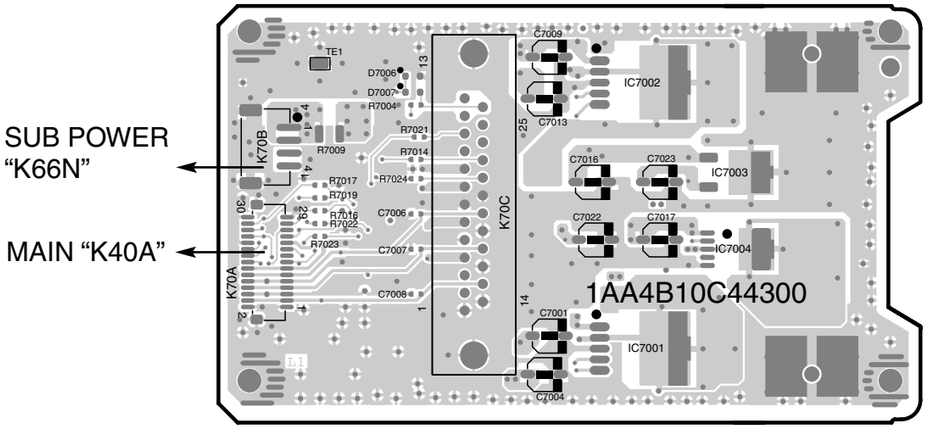

I/F (SIDE:B)

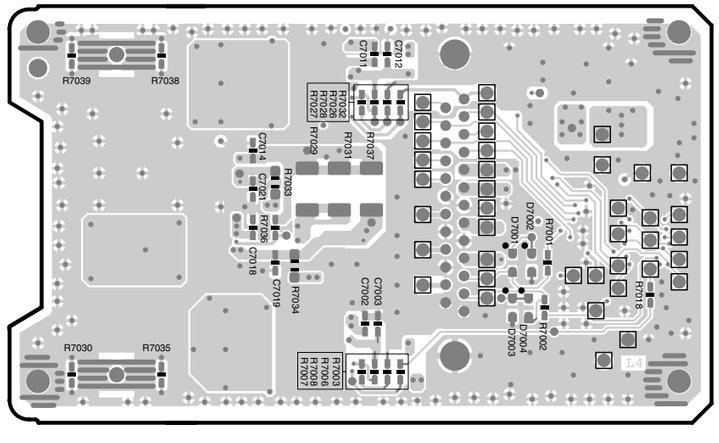

■ Pin description of diode, transistor and IC

● Diode

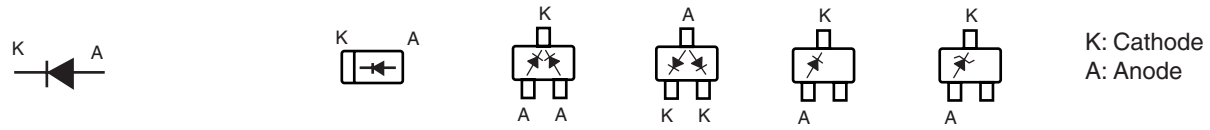

● Transistor/FET

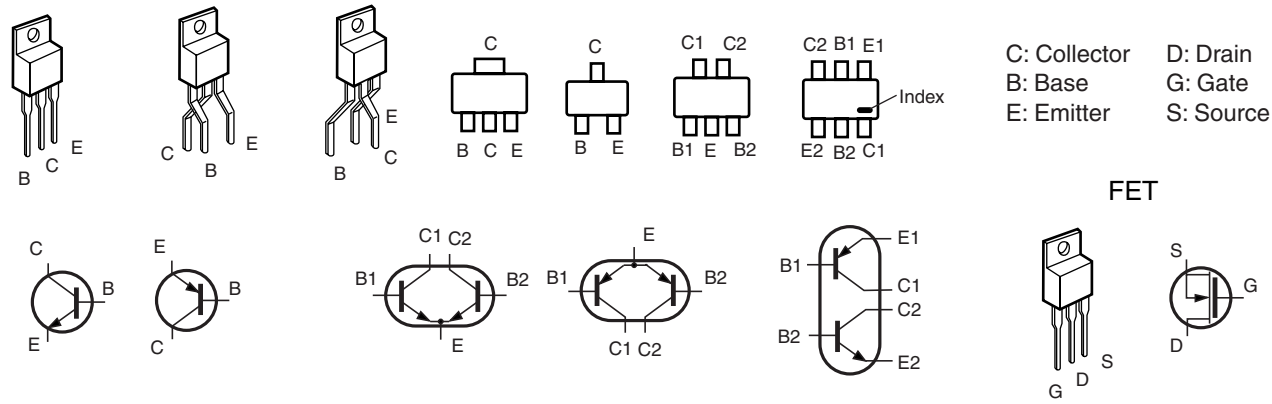
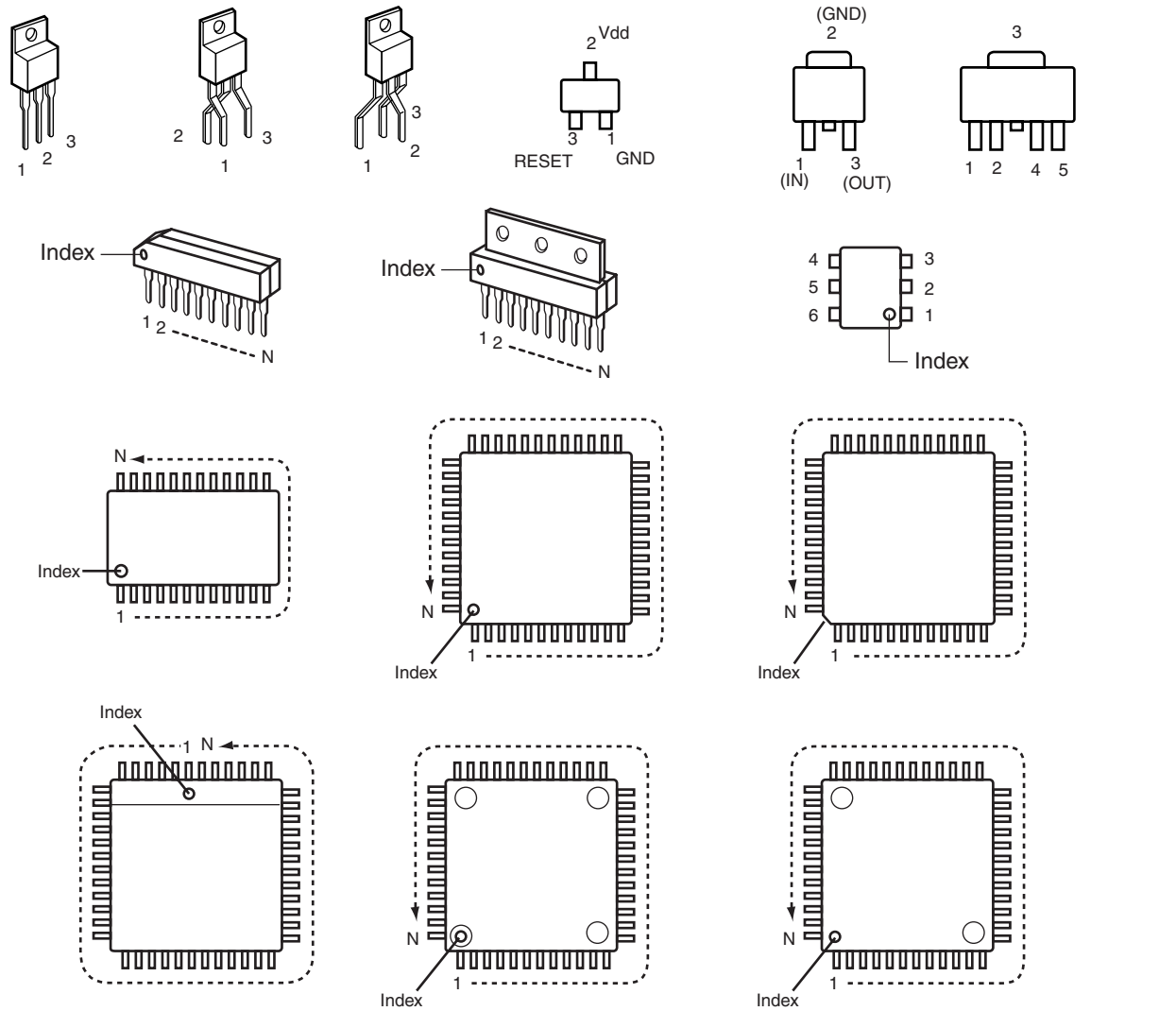
● IC